# AGENDA
# MAPLE PLAIN CITY COUNCIL – REGULAR MEETING
# MAPLE PLAIN CITY HALL
# FEBRUARY 24, 2014
# 7:00 PM

## 1. CALL TO ORDER

## 2. PLEDGE OF ALLEGIANCE

## 3. ADOPT AGENDA

## 4. PROCLAMATIONS

## 5. CONSENT AGENDA

A. Approve January 27 City Council workshop meeting minutes.
B. Approve January 27 City Council meeting minutes.
C. Approve February 5 City Council special meeting minutes.
D. Accounts payable.
E. Approve Pioneer-Sarah Creek Watershed City Council Alternatives

## 6. VISITORS TO BE HEARD

*Note: This is a courtesy extended to persons wishing to address the council who are not on the agenda. A completed public comment form should be presented to the city administrator prior to the meeting; presentations will be limited to 3 minutes. This session will be limited to 15 minutes.*

## 7. PUBLIC HEARINGS

## 8. ADMINISTRATIVE REPORTS

A. West Hennepin Public Safety monthly report
B. City Engineer monthly report
C. City Planner monthly report

## 9. OLD BUSINESS

## 10. NEW BUSINESS

A. Approval of Main Street West and Rainbow Avenue Utility and Street Improvements- Urban Section
B. Approve and Authorize Bid for Water Meter Replacement
C. Approval of Preliminary and Final Plat Approval Request for 5030 Highway 12 Subdivision.

## 11. LEGISLATIVE/INTERGOVERNMENTAL AFFAIRS

## 12. COUNCIL REPORTS & OTHER BUSINESS

## 13. ADJOURNMENT

**Maple Plain City Council Workshop**
**Meeting Minutes**
**January 27, 2014**
**Maple Plain City Hall**

## 1. CALL TO ORDER

**Councilmember Young called the meeting to order at 7 p.m.**

Present: Councilmembers Dave Eisinger, Justin McCoy and Jerry Young. Also present was City Administrator Tessia Melvin, and City Attorney, Jeff Carson.

Mayor Hackbarth was not in attendance. Councilmember DeLuca arrived at 6:45 p.m.

## 2. PLEDGE OF ALLEGIANCE

## 3. ADOPT AGENDA

**Councilmember Eisinger moved to adopt the agenda as presented; seconded by Councilmember McCoy. Motion passed 3-0.**

## 4. PROCLAMATION

Acting Mayor Young read a proclamation naming the City of Maple Plain as a Heart Safe Community.

## 5. CONSENT AGENDA

Items to approved under the Consent Agenda:

- **A.** Approve January 6 City Council workshop meeting minutes.
- **B.** Approve January 13 City Council meeting minutes.
- **C.** Approve January 20 City Council workshop meeting minutes
- **D.** Accounts payable.

**Councilmember McCoy moved to approve the Consent Agenda; Councilmember Eisinger seconded. Motion passed 3-0.**

## 6. VISITORS TO BE HEARD

There were no visitors present.

## 7. PUBLIC HEARINGS

There were no public hearings held.

## 8. ADMINISTRATIVE REPORTS

The 2013 Annual Reports were given by West Hennepin Public Safety and the Maple Plain Fire Department.

City Engineer Boyum gave a monthly report.

## 9. OLD BUSINESS

**Councilmember DeLuca moved to have City Attorney Carson and City Administrator Melvin meet with the two property owners regarding stormwater issues and provide an update to the Council; Councilmember Eisinger seconded. Motion passed 4-0.**

## 10. NEW BUSINESS

### A. Approval of Main Street West and Rainbow Avenue Utility and Street Improvement-Urban Section

City Engineer Dan Boyum presented information on this project. The City Council held a Public Information meeting on Thursday, January 23, which resulted in a lot of good conversation, ideas and answered many questions.

Boyum presented the following to the City Council:

- Survey work and design has begun and is continuing on the project.
- The geotechnical report was completed and forwarded in early January 2014.
- The Council discussed possible sanitary sewer extensions to serve areas in Independence, west of the current City Limits at their work session on January 6, 2014 and at the January 13, 2014 council meeting.
- Council directed Staff to contact Independence Staff to review service areas and possible sanitary sewer extensions.
- The City Engineer has further reviewed the rural versus urban section on Main Street and is recommending the urban section to minimize disturbance to adjacent properties, minimize the number of easements outside of the right-of-way, and to address the overall storm sewer system in Rainbow Park.
- The City Council reviewed the attached figures and engineering recommendations at their January 20, 2014 Worksession.
- A public information meeting was held on Thursday, January 23, 2014 to receive public comments on the engineering recommendations and current project design.
- The proposed schedule is to bring plans and specifications back to the February 24, 2014 Council meeting for approval and to set the bid opening.

**Councilmember McCoy moved to approve Main Street West and Rainbow avenue Utility and Street Improvements as an urban section; Councilmember Eisinger seconded. Motion passed 4-0.**

**B. Approve Specifications, Authorize Ad for Bid Water Meter Replacement**

Melvin reported that the City owns nearly 700 water meters, that measure water use and provide basic data used for utility billing. Water meters are very accurate when new, but their mechanical components are subject to wear and tear and tend to under report water usage as they age. The current water meters are 35+ years old and are in need of replacement. There are effectively two approaches to collecting water meter data via radio signal available in the municipal water utility market that are cost-effective for the City of Maple Plain. The most common approach involves vehicle mounted mobile data collectors and a fixed network to collect the radio data.

Option A: Fixed networks are primarily attractive to cities that need to bill at more frequent intervals or wanting the ability to monitor water use in real-time for the purpose of in-home leak detection. For those potential benefits, there would be a substantial additional cost (est. 30%) vs. mobile reading. Time reduction of staff is estimated at two people for an entire week to four hours for one person.

Option B: Mobile reading would allow drive by reads. No additional infrastructure is needed. Time reduction of staff is estimated at two people for an entire week to four hours for one person.

The primary goals of the Water Meter Replacement Project, in addition to getting more accurate accounting of customer water use and create a more time-efficient method of reading meters, instead of staff walking in all elements of weather. The bid documents would require the bidders to identify which option they can provide and supply additional detailed information regarding warranties, maintenance costs, batter life, etc. that will aid the City in determining which proposal will meet the City's long-term needs.

The following timeline was provided to the City Council:

- Approve Specs and Authorize Meter Bidding: January 27
- Award Meter Purchase/Delivery Bid: February 24
- Municipal Code Changes (as required)
- Authorize Service Agreement for Installation: March 10
- Water Meter Replacements: March and April

**Councilmember DeLuca moved to approve specifications, authorize ad for bid water meter replacement project; Councilmember Eisinger seconded. Motion passed 4-0.**

### C. Approval of Parks Commission Applicant

Melvin asked the Council to consider the appointment of Michael Rippberger to the Parks Commission.

**Councilmember McCoy moved to approve Michael Rippberger as a Parks Commissioner; Councilmember DeLuca seconded. Motion passed 4-0.**

## 11. LEGISLATIVE /INTERGOVERNMENTAL AFFAIRS

There were no legislative / intergovernmental affairs to report on.

## 12. COUNCIL REPORTS & OTHER BUSINESS

There were no Council reports or other business.

## 13. CLOSED SESSION

There was not a closed session.

## 14. ADJOURNMENT

**Councilmember McCoy moved to adjourn at 7:45 p.m. ;Councilmember Eisinger seconded. Motion passed 4-0.**

*Prepared by*

Tessia, City Administrator

**Maple Plain City Council Workshop**
**Meeting Minutes**
**January 27, 2014**
**Maple Plain City Hall**

## 1. CALL TO ORDER

**Councilmember Young called the meeting to order at 7 p.m.**

Present: Councilmembers Dave Eisinger, Justin McCoy and Jerry Young. Also present was City Administrator Tessia Melvin, and City Attorney, Jeff Carson.

Mayor Hackbarth was not in attendance. Councilmember DeLuca arrived at 6:45 p.m.

## 2. PLEDGE OF ALLEGIANCE

## 3. ADOPT AGENDA

**Councilmember Eisinger moved to adopt the agenda as presented; seconded by Councilmember McCoy. Motion passed 3-0.**

## 4. PROCLAMATION

Acting Mayor Young read a proclamation naming the City of Maple Plain as a Heart Safe Community.

## 5. CONSENT AGENDA

Items to approved under the Consent Agenda:

- **A.** Approve January 6 City Council workshop meeting minutes.
- **B.** Approve January 13 City Council meeting minutes.
- **C.** Approve January 20 City Council workshop meeting minutes
- **D.** Accounts payable.

**Councilmember McCoy moved to approve the Consent Agenda; Councilmember Eisinger seconded. Motion passed 3-0.**

## 6. VISITORS TO BE HEARD

There were no visitors present.

## 7. PUBLIC HEARINGS

There were no public hearings held.

## 8. ADMINISTRATIVE REPORTS

The 2013 Annual Reports were given by West Hennepin Public Safety and the Maple Plain Fire Department.

City Engineer Boyum gave a monthly report.

## 9. OLD BUSINESS

**Councilmember DeLuca moved to have City Attorney Carson and City Administrator Melvin meet with the two property owners regarding stormwater issues and provide an update to the Council; Councilmember Eisinger seconded. Motion passed 4-0.**

## 10. NEW BUSINESS

### A. Approval of Main Street West and Rainbow Avenue Utility and Street Improvement-Urban Section

City Engineer Dan Boyum presented information on this project. The City Council held a Public Information meeting on Thursday, January 23, which resulted in a lot of good conversation, ideas and answered many questions.

Boyum presented the following to the City Council:

- Survey work and design has begun and is continuing on the project.
- The geotechnical report was completed and forwarded in early January 2014.
- The Council discussed possible sanitary sewer extensions to serve areas in Independence, west of the current City Limits at their work session on January 6, 2014 and at the January 13, 2014 council meeting.
- Council directed Staff to contact Independence Staff to review service areas and possible sanitary sewer extensions.
- The City Engineer has further reviewed the rural versus urban section on Main Street and is recommending the urban section to minimize disturbance to adjacent properties, minimize the number of easements outside of the right-of-way, and to address the overall storm sewer system in Rainbow Park.
- The City Council reviewed the attached figures and engineering recommendations at their January 20, 2014 Worksession.
- A public information meeting was held on Thursday, January 23, 2014 to receive public comments on the engineering recommendations and current project design.
- The proposed schedule is to bring plans and specifications back to the February 24, 2014 Council meeting for approval and to set the bid opening.

**Councilmember McCoy moved to approve Main Street West and Rainbow avenue Utility and Street Improvements as an urban section; Councilmember Eisinger seconded. Motion passed 4-0.**

**B. Approve Specifications, Authorize Ad for Bid Water Meter Replacement**

Melvin reported that the City owns nearly 700 water meters, that measure water use and provide basic data used for utility billing. Water meters are very accurate when new, but their mechanical components are subject to wear and tear and tend to under report water usage as they age. The current water meters are 35+ years old and are in need of replacement. There are effectively two approaches to collecting water meter data via radio signal available in the municipal water utility market that are cost-effective for the City of Maple Plain. The most common approach involves vehicle mounted mobile data collectors and a fixed network to collect the radio data.

Option A: Fixed networks are primarily attractive to cities that need to bill at more frequent intervals or wanting the ability to monitor water use in real-time for the purpose of in-home leak detection. For those potential benefits, there would be a substantial additional cost (est. 30%) vs. mobile reading. Time reduction of staff is estimated at two people for an entire week to four hours for one person.

Option B: Mobile reading would allow drive by reads. No additional infrastructure is needed. Time reduction of staff is estimated at two people for an entire week to four hours for one person.

The primary goals of the Water Meter Replacement Project, in addition to getting more accurate accounting of customer water use and create a more time-efficient method of reading meters, instead of staff walking in all elements of weather. The bid documents would require the bidders to identify which option they can provide and supply additional detailed information regarding warranties, maintenance costs, batter life, etc. that will aid the City in determining which proposal will meet the City's long-term needs.

The following timeline was provided to the City Council:

- Approve Specs and Authorize Meter Bidding: January 27
- Award Meter Purchase/Delivery Bid: February 24
- Municipal Code Changes (as required)
- Authorize Service Agreement for Installation: March 10
- Water Meter Replacements: March and April

**Councilmember DeLuca moved to approve specifications, authorize ad for bid water meter replacement project; Councilmember Eisinger seconded. Motion passed 4-0.**

### C. Approval of Parks Commission Applicant

Melvin asked the Council to consider the appointment of Michael Rippberger to the Parks Commission.

**Councilmember McCoy moved to approve Michael Rippberger as a Parks Commissioner; Councilmember DeLuca seconded. Motion passed 4-0.**

## 11. LEGISLATIVE /INTERGOVERNMENTAL AFFAIRS

There were no legislative / intergovernmental affairs to report on.

## 12. COUNCIL REPORTS & OTHER BUSINESS

There were no Council reports or other business.

## 13. CLOSED SESSION

There was not a closed session.

## 14. ADJOURNMENT

**Councilmember McCoy moved to adjourn at 7:45 p.m. ;Councilmember Eisinger seconded. Motion passed 4-0.**

*Prepared by*

Tessia, City Administrator

**Maple Plain City Council Special Meeting**
**Meeting Minutes**
**February 5, 2014**
**Maple Plain City Hall**

## 1. CALL TO ORDER

**Mayor Hackbarth called the meeting to order at 5:30 p.m.**

Present: Councilmembers Dave Eisinger, Justin McCoy and Jerry Young and Mike DeLuca. Also present were City Administrator Tessia Melvin and City Attorney, Jeff Carson.

## 2. Closed Session

**City Attorney, Jeff Carson, stated that the Council would be in closed session to discuss a formal complaint. The Council Closed session at 5:35 p.m. The City Council resumed Open Session at 6:40 p.m.**

**Councilmember Eisinger moved to hire Pamela L. VanderWiel, Everett & VanderWiel, PLLP, to conduct an investigation on the formal complaint; seconded by McCoy. Motion passed 4-0-1. Mayor Hackbarth abstained.**

## 3. Storm Water Utility Fees

City Attorney, Jeff Carson, provided the Council an update on the current status of the storm water utility fees. The Council met in October 2013 and asked that the Interim City Administrator and Mayor meet with Brad McKown. This meeting did not occur. City Administrator Melvin brought this topic up at the January 27 workshop. The City Council agreed to have Melvin and Carson talk with McKown and his attorney on this issue.

Carson and Melvin met with McKown on Friday, January 31. Current McKown's property is facing forfeiture due to delinquent storm water utility fees in the amount of nearly $13,000. In addition, it was reported that McKown did not purchase the land, but it was given to him. The property is important to McKown as it has been part of his family's history.

Carson reported that the City cannot delay the forfeiture process, but they could examine their storm water rates, compare them to surrounding cities and create a solution to this issue. Melvin provided the Council with surrounding cities storm water utility rates. She also presented the Council with programs that work with residents, businesses and the city to reduce fees due to storm water prevention work. Some cities offer credits that reduce storm water utility rates 25% to 100%.

After some discussion on this topic the Council asked Melvin to provide substantial research on storm water fees in comparison to the City's and to look at credit programs.

Questions that were asked by the Council to be addressed at a March 10 workshop included:

- Can the property be bought?
- What is the City's responsibility to the storm water pond?
- What is the watershed's responsibility to maintain the pond?

Melvin agreed to cancel the EDA meeting and replace it with a workshop, where she will present research to see if the City's rates are fair and reasonable.

**Councilmember Eisinger moved to conduct a Council workshop on March 10 to discuss the City's current storm water fees, determine if they are fair and reasonable and then look at some alternatives to helping the property owner, seconded by McCoy. Motion passed 4-1. Mayor Hackbarth opposed the motion.**

**4. Other Issues**

City Administrator, Melvin, asked the Council for direction on the property at 1654 Marsh Lane. Melvin provided the Council an update on the property. Public works had not been able to access the water meter for an actual meter read for the past three years. As a result, they have had to bill the property owner based on an estimation. For the last quarter, the property owner was charged for 237,000 gallons of water. Recently the property owner asked the City Public Works to shut off the water due to a leak. Public Works reminded the property owner of the water meter issue. The owner fixed the problem, but at the last read, the property owner should have been charged for an additional 300,000 gallons of water.

After much discussion, the Council agreed to charge the property owner for the additional water used.

**Councilmember Young moved to charge the property owner for the full amount of water used; seconded by DeLuca. Motion passed 5-0.**

*Prepared by*

Tessia, City Administrator

# CITY OF MAPLE PLAIN

## Payments

**Current Period: February 2014**

| | | | | |
|---|---|---|---|---|
| Batch Name | 02/25/14Cit2 | User Dollar Amt | $61,167.89 | |
| | Payments | Computer Dollar Amt | $61,167.89 | |
| | | | $0.00 | **In Balance** |

| | | | | | |
|---|---|---|---|---|---|
| Refer | 18591 *ABDO EICK & MEYERS, LLP* | | | | |
| Cash Payment | E 101-41500-301 Auditing & Accounting S | 2013 Audit | | | $2,900.00 |
| Invoice 320415 | | | | | |
| Transaction Date | 2/21/2014 | Bank of Maple Plain | 10100 | **Total** | $2,900.00 |
| Refer | 18592 *BRIMEYER FURSMAN, LLC* | | | | |
| Cash Payment | E 101-41110-319 Other Consulting Service | Onboarding Session | | | $990.32 |
| Invoice 351 | | | | | |
| Transaction Date | 2/21/2014 | Bank of Maple Plain | 10100 | **Total** | $990.32 |
| Refer | 18593 *BANYON* | | | | |
| Cash Payment | E 101-41500-309 EDP, Software and Desi | GASB Annual Support | | | $195.00 |
| Invoice 0150986 | | | | | |
| Transaction Date | 2/21/2014 | Bank of Maple Plain | 10100 | **Total** | $195.00 |
| Refer | 18594 *BOSSARDT CORPORATION* | | | | |
| Cash Payment | E 101-46500-319 Other Consulting Service | Facility Study | | | $2,656.25 |
| Invoice 20142 | | | | | |
| Transaction Date | 2/21/2014 | Bank of Maple Plain | 10100 | **Total** | $2,656.25 |
| Refer | 18595 *CRABTREE COMPANIES INC* | | | | |
| Cash Payment | E 101-41500-309 EDP, Software and Desi | Laser Fiesch Annual Support | | | $1,153.00 |
| Invoice 121632 | | | | | |
| Transaction Date | 2/21/2014 | Bank of Maple Plain | 10100 | **Total** | $1,153.00 |
| Refer | 18596 *DISPLAY SALES* | | | | |
| Cash Payment | E 101-45200-228 Park Equipment Supplie | Flag Poles | | | $185.00 |
| Invoice 94750 | | | | | |
| Transaction Date | 2/21/2014 | Bank of Maple Plain | 10100 | **Total** | $185.00 |
| Refer | 18597 *ECM PUBLISHERS INC* | | | | |
| Cash Payment | G 101-20217 Subdivision Escrow | Public Hearing Notice- 5030 HWY 12 | | | $30.84 |
| Invoice 72232 | | | | | |
| Cash Payment | E 101-41420-351 Legal Notices Publishing | Water Meter Bid Notice | | | $92.96 |
| Invoice 70314 | | | | | |
| Transaction Date | 2/21/2014 | Bank of Maple Plain | 10100 | **Total** | $123.80 |
| Refer | 18598 *GOPHER STATE ONE-CALL, INC.* | | | | |
| Cash Payment | E 101-43000-437 Miscellaneous | Annual Fee and Jan Faxes | | | $111.60 |
| Invoice 92443, 90829 | | | | | |
| Transaction Date | 2/21/2014 | Bank of Maple Plain | 10100 | **Total** | $111.60 |
| Refer | 18599 *HEALTHPARTNERS* | | | | |
| Cash Payment | G 101-21706 Health Insurance | Health Insurance Premium- March | | | $3,029.50 |
| Invoice 45954984 | | | | | |
| Transaction Date | 2/21/2014 | Bank of Maple Plain | 10100 | **Total** | $3,029.50 |
| Refer | 18600 *SUBURBAN RATE AUTHORITY* | | | | |
| Cash Payment | E 101-41110-433 Dues & Subscriptions | Membership & Dues- 2014 | | | $400.00 |
| Invoice | | | | | |

# CITY OF MAPLE PLAIN

## Payments

**Current Period: February 2014**

| | | | | | |
|---|---|---|---|---|---|
| Transaction Date | 2/21/2014 | Bank of Maple Plain | 10100 | **Total** | $400.00 |
| Refer | 18601 *METROPOLITAN COUNCIL ENV SE* | | | | |
| Cash Payment | E 602-49450-319 Other Consulting Service | Waste Water Services- March | | | $14,401.90 |
| Invoice 1030310 | | | | | |
| Transaction Date | 2/21/2014 | Bank of Maple Plain | 10100 | **Total** | $14,401.90 |
| Refer | 18602 *MAPLE PLAIN/INDEPENDENCE FIR* | | | | |
| Cash Payment | E 101-42290-307 Fire Administration | Fire Services- Jan | | | $13,482.92 |
| Invoice | | | | | |
| Cash Payment | E 101-42290-307 Fire Administration | Fire Services- Feb | | | $13,482.92 |
| Invoice | | | | | |
| Transaction Date | 2/21/2014 | Bank of Maple Plain | 10100 | **Total** | $26,965.84 |
| Refer | 18603 *METRO WEST INSPECTION SERVI* | | | | |
| Cash Payment | E 101-42400-308 Building Inspection | Inspection Services | | | $27.00 |
| Invoice | | | | | |
| Transaction Date | 2/21/2014 | Bank of Maple Plain | 10100 | **Total** | $27.00 |
| Refer | 18604 *MEDIACOM* | | | | |
| Cash Payment | E 101-41500-321 Telephone | City Hall Static IP | | | $109.95 |
| Invoice | | | | | |
| Transaction Date | 2/21/2014 | Bank of Maple Plain | 10100 | **Total** | $109.95 |
| Refer | 18605 *SUMMIT FIRE PROTECTION* | | | | |
| Cash Payment | E 601-49400-227 Utility Maintenance Supp | Service Call | | | $827.99 |
| Invoice 1309563 | | | | | |
| Transaction Date | 2/21/2014 | Bank of Maple Plain | 10100 | **Total** | $827.99 |
| Refer | 18606 *ERICKSON, ROLF E.A.* | | | | |
| Cash Payment | E 101-41550-305 Assessing Services | Jan- Assessing | | | $1,200.96 |
| Invoice | | | | | |
| Transaction Date | 2/21/2014 | Bank of Maple Plain | 10100 | **Total** | $1,200.96 |
| Refer | 18607 *TOSHIBA* | | | | |
| Cash Payment | E 101-41500-413 Office Equipment Rental | Copier Lease- Feb | | | $273.39 |
| Invoice 246880959 | | | | | |
| Transaction Date | 2/21/2014 | Bank of Maple Plain | 10100 | **Total** | $273.39 |
| Refer | 18608 *OFFICE DEPOT* | | | | |
| Cash Payment | E 101-41500-201 Office Supplies | Office Supplies | | | $58.44 |
| Invoice 699774333001 | | | | | |
| Transaction Date | 2/21/2014 | Bank of Maple Plain | 10100 | **Total** | $58.44 |
| Refer | 18609 *CARSON & CLELLAND* | | | | |
| Cash Payment | E 101-42110-304 Legal Services | Vehicle Forfeiture | | | $71.25 |
| Invoice | | | | | |
| Cash Payment | E 101-42110-304 Legal Services | Criminal | | | $1,288.75 |
| Invoice | | | | | |
| Cash Payment | E 101-42110-304 Legal Services | Criminal | | | $323.85 |
| Invoice | | | | | |
| Cash Payment | G 101-20212 Planned Unit Develop. Escro | Rose Creek Townhome Project | | | $70.00 |
| Invoice | | | | | |
| Cash Payment | E 101-41110-304 Legal Services | City Council Meetings and Preparation | | | $350.00 |
| Invoice | | | | | |

# CITY OF MAPLE PLAIN

## Payments

**Current Period: February 2014**

| | | | | | |
|---|---|---|---|---|---|
| Cash Payment | E 101-41610-304 Legal Services | Staff Meetings and Preparations | | | $793.33 |
| Invoice | | | | | |
| Cash Payment | E 101-41610-304 Legal Services | General Services | | | $1,260.00 |
| Invoice | | | | | |
| Transaction Date | 2/21/2014 | Bank of Maple Plain | 10100 | **Total** | $4,157.18 |
| Refer | 18610 *DELTA DENTAL* | | | | |
| Cash Payment | G 101-21707 Dental Insurance | Dental Insurance- March | | | $313.45 |
| Invoice | | | | | |
| Transaction Date | 2/21/2014 | Bank of Maple Plain | 10100 | **Total** | $313.45 |
| Refer | 18611 *PROLAWNS ON THE LAKE* | | | | |
| Cash Payment | E 101-45200-311 Contract Service | 2014 Three Applications for Timpe Field | | | $818.40 |
| Invoice | | | | | |
| Transaction Date | 2/21/2014 | Bank of Maple Plain | 10100 | **Total** | $818.40 |
| Refer | 18612 *WATERTOWN PARTS CO.* | | | | |
| Cash Payment | E 101-43000-404 Machinery & Equipment | Public Works Supplies | | | $138.92 |
| Invoice | | | | | |
| Transaction Date | 2/21/2014 | Bank of Maple Plain | 10100 | **Total** | $138.92 |
| Refer | 18613 *MN DEPT TRANSPORTATION* | | | | |
| Cash Payment | R 101-36500 Collected for other Governme | Liesch Lease- March | | | $130.00 |
| Invoice 164417 | | | | | |
| Transaction Date | 2/21/2014 | Bank of Maple Plain | 10100 | **Total** | $130.00 |

### Fund Summary

| | 10100 Bank of Maple Plain |
|---|---|
| 101 GENERAL FUND | $45,938.00 |
| 601 WATER FUND | $827.99 |
| 602 SEWER FUND | $14,401.90 |
| | $61,167.89 |

| | |
|---|---|
| Pre-Written Checks | $0.00 |
| Checks to be Generated by the Computer | $61,167.89 |
| Total | $61,167.89 |

**CARSON, CLELLAND & SCHREDER**

**Attorneys at Law**
**6300 SHINGLE CREEK PARKWAY STE 305**
**MINNEAPOLIS, MN 55430-2190**
**(763)-561-2800**

January 30, 2014

CITY OF MAPLE PLAIN
ATTN: MAGGIE MCCALLUM
P.O. BOX 97
MAPLE PLAIN, MN 55359

Professional Services

| | | Amount |
|---|---|---|
| | ..Civil | |
| 1/6/2014 | Prepare for staff meeting; review files and correspondence from Tessia | 93.33 |
| 1/7/2014 | Prepare and attend staff meeting | 280.00 |
| | Review massage ordinance; review ordinance with staff and research additional ordinances | 210.00 |
| 1/13/2014 | Prepare for and attend EDA and regular meeting | 350.00 |
| 1/14/2014 | Review notes and correspondence to Tessia Melvin | 46.67 |
| 1/15/2014 | Research various city ordinances, massage certification organizations; review/update file | 245.00 |
| 1/16/2014 | Conference with Attorney John Thames and review massage ordinance issues; conference with Tessia Melvin regarding miscellaneous project status | 93.33 |
| 1/16/2014-1/17/2014 | Revew Mabel Crandell utility debt information and correspondence to Maggie | 70.00 |
| 1/16/2014 | Research city ordinances; national certification processes; conference with Attorney Jeffrey Carson; draft research memorandum; update file | 315.00 |
| 1/21/2014 | Preparation and attend staff meeting; review notes and correspondence to Tessia regarding public notice requirements | 420.00 |
| 1/22/2014 | Conference with Tessia; miscellaneous project issues. | 70.00 |
| 1/24/2014 | Research competitive billing requirements, note file. | 70.00 |
| | Conference with Tessia; review items for workshop; review email chain regarding Shenk; conference with Attorney Ritts regarding storm water issues. | 140.00 |
| | SUBTOTAL: | [ 2,403.33] |
| | .Rose Creek Builders | |
| 1/3/2014 | Review proposal received from Developer; review Purchase Agreement and file | 70.00 |
| | SUBTOTAL: | [ 70.00] |
| | Criminal | |
| 12/30/2013 | Correspondence with defense attorneys, officers; disposition letter; review files; correspondence to victims and instructions to legal assistant; correspondence to victims and witnesses; select witnesses for jury trials; note files | 95.00 |

| | | Amount |
|---|---|---|
| 1/3/2014 | Review files and prepare memorandum to files. | 23.75 |
| 1/6/2014 | Correspondence with defendants, defense attorneys; review discovery; research charging statutes; prepare decline letters; review/edit/sign complaints; correspondence with advocate; note files | 63.33 |
| 1/9/2014 | Preparation for January 10, 2014 cases. | 63.33 |
| 1/10/2014 | Correspondence with defense attorneys, victims and witnesses; correspondence with officers; review discovery; note files and offers | 47.50 |
| | Attend Arraignments and Pretrial hearings. | 95.00 |
| 1/14/2014 | Review videos for criminal case. | 15.83 |
| 1/16/2014 | Review criminal cases in MNCIS. | 47.50 |
| 1/17/2014 | Correspondence with defendants; defense attorneys; and witnesses; note files | 31.67 |
| | Review emails regarding criminal files and prepare memorandums to files. | 31.67 |
| 1/22/2014 | Prepare disposition letters regarding January 10, 2014 cases, prepare memorandums to files, select witnesses for upcoming contested hearings. | 95.00 |
| 1/23/2014 | Correspondence with defense Attorneys, defendants, review discovery, jury trial preparation, research enhance ability issue, note files, research files in preparation for January 24, 2014 Arraignment/Pre-Trial calendar at Ridgedale court. | 126.67 |
| 1/24/2014 | Attend Arraignments and Pretrial hearings, at Ridgedale court. | 205.83 |
| | Discuss criminal case with Attorney John Thames. | 31.67 |
| | Open criminal files, preparation of criminal complaints; preparation of cases for court calendars, including court and jury trials; contact and notice to witnesses for trial testimony, prepare outgoing discovery requests, complete incoming discovery requests for monthly period | 157.50 |
| | Open criminal files, preparation of criminal complaints; preparation of cases for court calendars, including court and jury trials; contact and notice to witnesses for trial testimony, prepare outgoing discovery requests, complete incoming discovery requests for monthly period | 157.50 |
| | SUBTOTAL: | [ 1,288.75] |
| | Forfeiture Expenses: | |
| 1/16/2014 | Phone messages with mother of defendant regarding forfeiture case. | 47.50 |
| 1/23/2014 | Review and correspondence to emails regarding forfeiture cases. | 23.75 |
| | SUBTOTAL: | [ 71.25] |
| | **For professional services rendered** | **$3,833.33** |

Client Expense Charges :

Criminal Expenses

| | |
|---|---|
| Certified driver's license fee | 2.00 |
| Annual fee for LETG | 192.38 |
| Monthly support fee | 12.83 |
| Westlaw charges for December | 116.64 |
| SUBTOTAL: | [ 323.85] |
| **Total Client Expense Charges** | **$323.85** |

| | | Amount |
|---|---|---|
| | **Total amount of this bill** | **$4,157.18** |
| | **Previous balance** | **$4,507.98** |
| 1/24/2014 | Payment - thank you | ($4,507.98) |
| | **Total payments and adjustments** | **($4,507.98)** |
| | **Balance due** | **$4,157.18** |

I hereby declare under the penalties of perjury that the foregoing statement for legal services is just and correct and that no part thereof has been paid.

Jeffrey A. Carson, City Attorney

Agenda Information Memorandum
February 24, 2014, Maple Plain City Council

**5. CONSENT AGENDA**
**E. Approve Pioneer-Sarah Creek Watershed City Council Alternatives**

**ACTION TO BE CONSIDERED**

To approve Mayor Roger Hackbarth, Councilmember Justin McCoy, Councilmember Jerry Young and Councilmember Dave Eisinger as alternatives for the Pioneer-Sarah Creek Watershed Commission to serve as alternates when Councilmember Mike DeLuca cannot attend meetings.

**FACTS**

- Currently Councilmember DeLuca is the appointed representation for the Pioneer-Sarah Creek Watershed Commission and Councilmember Eisinger is the alternate.
- With the busy schedules of councilmembers, staff recommends that all of the Councilmembers be appointed as alternates, so that they can attend Commission meetings.
- The Pioneer-Sarah Creek Watershed Commission ask that this formally be done by a Council vote

Agenda Information Memorandum
February 24, 2014 - Maple Plain City Council

**8. ADMINISTRATIVE REPORTS**
**A. WEST HENNEPIN PUBLIC SAFETY REPORT**

**ACTION TO BE CONSIDERED**

To receive and accept the monthly report from West Hennepin Public Safety.

**FACTS**

- See attached.

**ATTACHMENTS**

Attached on page(s) 21 through 24 is the monthly report from West Hennepin Public Safety.

Date: February 7, 2014

To: Public Safety Commissioners
City of Independence Council Members
City of Maple Plain Council Members

From: Director Ray McCoy

SUBJECT: JANUARY 2014 ACTIVITY REPORT

The purpose of this report is to give the reader a quick overview of the activities of the Public Safety Department each month. It also compares monthly and year-to-date information to the reader.

The report is broken down into five categories, as defined by the Criminal Justice Reporting System.

CRIMINAL-- Criminal is broken down into Part I and Part II crimes.

Part I includes crimes against persons versus crimes against property; criminal homicide, forcible rape, robbery assault, aggravated assault, burglary -breaking or entering, larceny-theft, larceny analysis, motor vehicle theft and arson.

Part II includes other assaults, forgery and counterfeiting, fraud, embezzlement, stolen property, buying, receiving, possession; vandalism, weapons, carrying, possessing, etc.; prostitution and commercialized vice, sex offenses; drug abuse violations, gambling, offenses against the family and children, driving under the influence, liquor laws, drunkenness, disorderly conduct, vagrancy, all other offenses, suspicion, curfew and loitering laws - persons under 18; and runaways - persons under 18.

TRAFFIC-- Includes violations of the road and driving laws.

PART III-- Lost and Found: Includes lost and found persons, animals, and property, and stalled and abandoned vehicles.

PART IV-- Casualties: Includes all motor vehicle accidents, boating, and snowmobile; public home occupational accidents, fires, suicides, sudden deaths, burning permits, and burning violations.

PART V-- Miscellaneous Public: Includes open doors, gun permit applications, suspicious activities, animal complaints, motorist assists, alarm calls, parking complaints, house checks, driving complaints, civil matters, family disputes, department assists.

The balance of the report shows the total number of incidents handled, miles driven and how the Public Safety Department received calls. If anyone should desire more detailed statistical data, please contact my office.

\\WHPS#0\share\monthlyactivityreport\2013\lettertocouncilmonthlyreport.docx

*West Hennepin Public Safety Department*
*1918 County Road 90 / Maple Plain, Minnesota 55359*
*Phone: (763) 479-0500 / Fax: (763) 479-0504*
*Web Address: http://www.westhennepin.com E-mail: westhennepin@westhennepin.com*

# Monthly Activity Report
## January 2014

| Offense | This Month | Same Month Last Year | | This Year To Date | | Last Year To Date |
|---|---|---|---|---|---|---|
| **City Of Independence** | | | | | | |
| Criminal | 2 | 7 | | 2 | | 7 |
| Traffic | 54 | 142 | | 54 | | 142 |
| Part III | 3 | 7 | | 3 | | 7 |
| Part IV | 52 | 38 | | 52 | | 38 |
| Part V | 123 | 123 | | 123 | | 123 |
| **Total City of Independence** | **234** | **317** | | **234** | | **317** |
| **City Of Maple Plain** | | | | | | |
| Criminal | 4 | 4 | | 4 | | 4 |
| Traffic | 32 | 80 | | 32 | | 80 |
| Part III | 1 | 3 | | 1 | | 3 |
| Part IV | 18 | 18 | | 18 | | 18 |
| Part V | 156 | 187 | | 156 | | 187 |
| **Total City Of Maple Plain** | **211** | **292** | | **211** | | **292** |
| **Grand Total Both Cities** | **445** | **609** | | **445** | | **609** |
| Other ICRS | 17 | 31 | | 17 | | 31 |
| Total ICR Reports | **462** | **640** | | **462** | | **640** |
| | 10,902 | 9,808 | | 10,902 | | 9,808 |
| **How Received** | | | | | | |
| Fax | 14 | 20 | | 14 | | 20 |
| In Person | 95 | 137 | | 95 | | 137 |
| Mail | 1 | 7 | | 1 | | 7 |
| Other | 2 | 5 | | 2 | | 5 |
| Phone | 38 | 30 | | 38 | | 30 |
| Radio | 182 | 163 | | 182 | | 163 |
| Visual | 130 | 278 | | 130 | | 278 |
| **Total** | **462** | **620** | | **462** | | **620** |

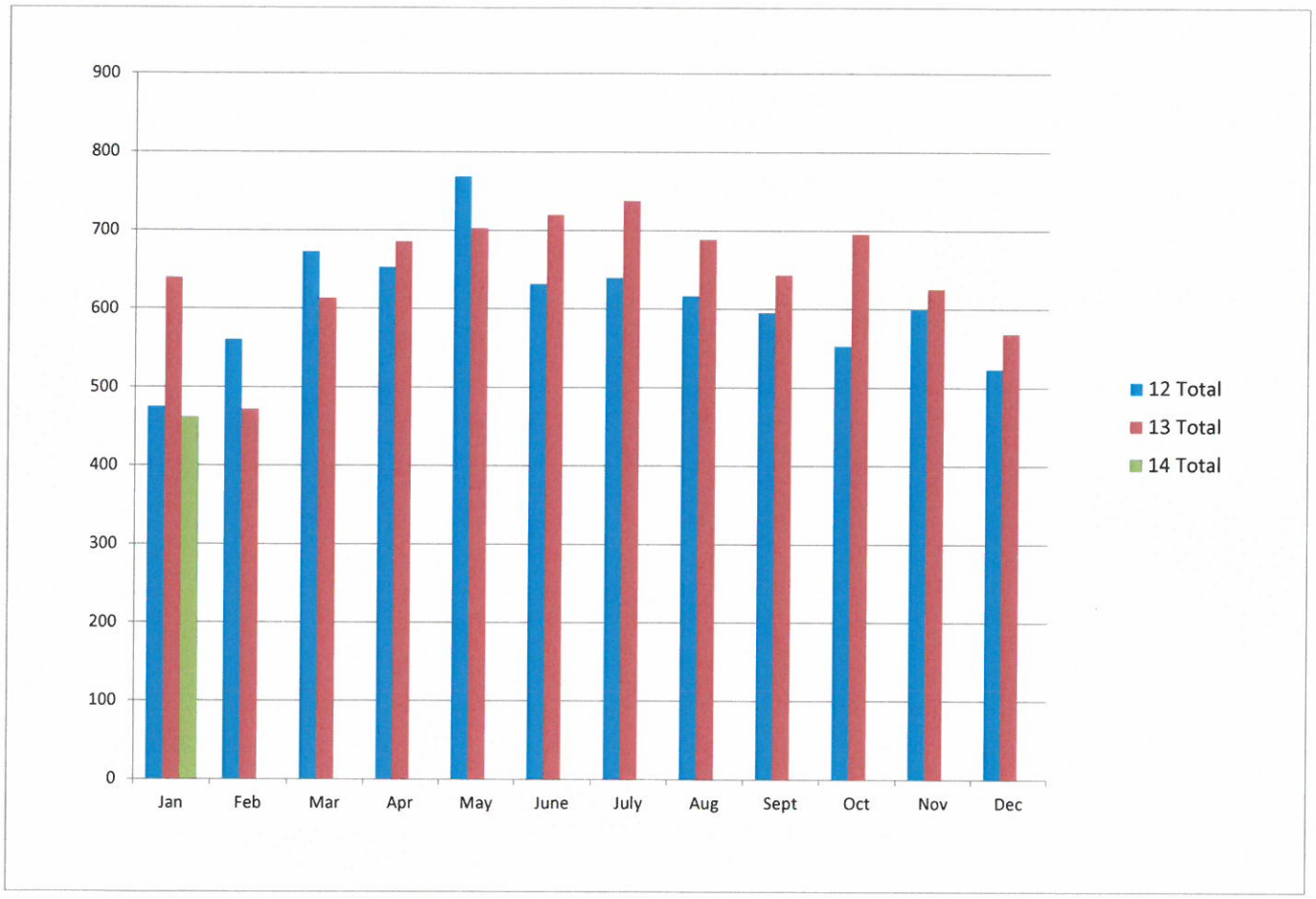
900
800
700
600
500
400
300
200
100
0
Jan
Feb
Mar
Apr
May
June
July
Aug
Sept
Oct
Nov
Dec
12 Total
13 Total
14 Total

January 2014 Criminal Part I & II
City of Independence Grid #'s 3-5

| AGN | ICR | Title | Create Date | Grid # | Reported Date | MOC range |
|---|---|---|---|---|---|---|
| WHPS | 14000266 | Small Amount Marijuana in Motor Vehicle | 1/18/2014 | 3 | 1/18/2014 | M3002 |
| WHPS | 14000448 | Order Of Protection Violation | 1/31/2014 | 4 | 1/31/2014 | N0370 |

January 2014 Criminal Part I & II
City of Maple Plain Grid #'s 1 & 2

| AGN | ICR | Title | Create Date | Grid # | Reported Date | MOC range |
|---|---|---|---|---|---|---|
| WHPS | 14000123 | Gas Drive Off / No Pay | 1/10/2014 | 2 | 1/10/2014 | TR099 |
| WHPS | 14000126 | 1st Degree Felony DWI | 1/10/2014 | 1 | 1/10/2014 | JDW01 |
| WHPS | 14000218 | Shop Lifting | 1/15/2014 | 2 | 1/15/2014 | U0280 |
| WHPS | 14000397 | Theft of Copper from Business | 1/28/2014 | 2 | 1/28/2014 | TV059 |

Agenda Information Memorandum
February 24, 2014 - Maple Plain City Council

**8. ADMINISTRATIVE REPORTS**
**B. CITY ENGINEER MONTHLY REPORT**

**ACTION TO BE CONSIDERED**

To receive and accept the monthly report from the City Engineer Dan Boyum.

**FACTS**

- See attached.

**ATTACHMENTS**

Attached on page(s) 26 through 26 is the monthly report from City Engineer Dan Boyum.

# Memo

Stantec

| | | | |
|---|---|---|---|
| To: | Honorable Mayor and Council, Staff | From: | Dan Boyum, City Engineer |
| File: | 193801804 | Date: | February 24, 2014 |

**Reference: Monthly Engineering Report**

The purpose of this update is to provide you with information on various projects and engineering activities from mid-January to date.

## City Projects

### Oak/Boundary Street and Utility Improvements

- No major work on this project this month.

### TH 12 Hawk Crossing

- No major work on this project this month.

### Budd Avenue Sanitary Sewer & Maple Avenue Watermain

- Staff discussions on rebidding just Sanitary Sewer part of project

### Main Street West and Rainbow Avenue – Utility and Street Improvements

- Plan, specification, and easement preparation and review items with Staff
- Prepared resolution and agenda item for plan approval and setting bid date

### Main Street Sidewalk Improvements

- No major activities. The benches and waste receptacles will be placed in Spring 2014.

### Rose Creek Builders and K-Bid Subdivision

- Responded to questions from engineering firms and developer of Rose Creek Builders
- Reviewed K-Bid Subdivision and discussed with Staff and Consultants.

## Miscellaneous

1. Prepared monthly engineering report.
2. Met with State Agency rep., Mayor Hackbarth, and City Administrator to discuss FEMA not funding ravine improvements. Agency rep. indicated possible riprap funding. City Staff is following up with another agency representative on possible other funding for park drainage improvements.

Agenda Information Memorandum
February 24, 2014 - Maple Plain City Council

**8. ADMINISTRATIVE REPORTS**
**C. CITY PLANNER MONTHLY REPORT**

**ACTION TO BE CONSIDERED**

To receive and accept the monthly report from the City Planner, Mark Kaltsas.

**FACTS**

- See attached.

**ATTACHMENTS**

Attached on page(s) 28 through 28 is the monthly report from City Planner, Mark Kaltsas.

# City of Maple Plain

# Memorandum

**To:** City Council

**From:** Mark Kaltsas, City Planner

**CC:** Tessia Melvin, City Administrator

**Date:** February 21, 2014

**Re:** **Planning Update**

***Planning Commission Meeting***

February 13, 2014: Request for Preliminary and Final Plat for K-Bid Addition. Planning Commissioners recommended approval to the City Council

***Meetings:***
Staff met with Rose Creek Builders to discuss the proposed Meadows of Maple Plain Development. It is anticipated that this development will be submitted for City consideration in March. This development is predicated on the K-Bid Addition Plat being finalized.

***Correspondence:***
Staff has had correspondence with the owners of the property located at 4975 Industrial Street about the possibility of adding additional buildings to the boat storage yard.

Staff has had correspondence with a potential developer interested in information pertaining to the grocery store property redevelopment.

Staff has had correspondence with several residents regarding setbacks, parking lot standards, accessory structures and other related planning questions.

Agenda Information Memorandum
February 24, 2014 - Maple Plain City Council

**10A: RESOLUTION NO. 14-0224-01**
**APPROVING PLANS AND SPECIFICATIONS AND ORDERING ADVERTISEMENT FOR BIDS FOR MAIN STREET WEST AND RAINBOW AVENUE UTILITY AND STREET IMPROVEMENTS**

## ACTION TO BE CONSIDERED

Approve Resolution No. 14-0224-01

## FACTS

- The City Council authorized preparation of a feasibility report to study the improvements in this area due to the age of the utilities, street conditions, and storm sewer drainage.
- A Neighborhood Workshop and Site Walk Through were held on August 28, 2013.
- The feasibility report was prepared and reviewed by the Council on September 23, 2013 and received on October 15, 2013.
- The Council held the public hearing on October 15, 2013 and continued the public hearing on October 28, 2013 Council Meeting.
- The Council approved a resolution on December 9, 2013 authorizing the City Engineer to prepare plans and specifications.
- A public information meeting was held on Thursday, January 23, 2014 to receive public comments on the engineering recommendations and current project design.
- The Council approved proceeding with an urban section on Main Street West as well as the other proposed storm sewer design at their January 27, 2014 Council Meeting.
- The Council directed the City Engineer to include the rebid of Halgren Road Watermain – Phase 2 Improvements with this project.
- The Council directed the City Engineer to include paving of the Rainbow Park Parking Lot as an alternate bid with this project.
- City Staff is coordinating easement meetings with affected property owners for the week of March 3, 2014.
- The estimated construction costs for the Main Street West and Rainbow Avenue Improvements is $3,037,000. The estimated construction costs for the Halgren Road Watermain Improvements is $217,000. The estimated construction total base bid is $3,254,000. The estimated costs for the parking lot paving at Rainbow Park is $31,800.

- The City Engineer will review specific items from the plans with the Council at the February 24, 2014 Council Meeting including the west end of Main Street West, tree removals on Rainbow Avenue, etc.

**ATTACHMENTS**

Attached on page(s) 31 through 60 is the resolution and plans.

**Resolution No. 14-0224-01**
**Approving Plans and Specifications and Ordering Advertisement for Bids for Main Street West and Rainbow Avenue Utility and Street Improvements**

WHEREAS, pursuant to a resolution passed by the council December 9, 2013, the city engineer has prepared plans and specifications for the improvement of Main Street West between Halgren Road and the west City Limits and Rainbow Avenue from Main Street West to Parkview Road by utility and street improvements and has presented such plans and specifications to the council for approval;

NOW THEREFORE, BE IT RESOLVED BY THE CITY COUNCIL OF MAPLE PLAIN, MINNESOTA:

1. Such plans and specifications, a copy of which is attached hereto and made a part hereof, are hereby approved.

2. The city administrator shall prepare and cause to be inserted in the official paper (and in a construction trade journal) an advertisement for bids upon the making of such improvement under such approved plans and specifications. The advertisement shall be published for 21 days, shall specify the work to be done, shall state that bids will be received by the clerk until 10 a.m. on March 25, 2014, at which time they will be publicly opened in the council chambers of the city hall by the city administrator and engineer, will then be tabulated, and will be considered by the council at 7 p.m. on April 14, 2014 in the council chambers of the city hall. Any bidder whose responsibility is questioned during consideration of the bid will be given an opportunity to address the council on the issue of responsibility. No bids will be considered unless sealed and filed with the administrator and accompanied by a cash deposit, cashier's check, bid bond or certified check payable to the administrator for five percent of the amount of such bid.

_____
Mayor

_____
City Administrator

**END OF FORM**

THE CONTRACTOR SHALL VERIFY AND BE RESPONSIBLE FOR ALL DIMENSIONS. DO NOT SCALE THE DRAWING. ALL WORK TO CONFORM TO THE APPLICABLE STANDARDS. COPYRIGHT © YEAR STANTEC. THE COPYRIGHTS TO ALL DESIGNS AND DRAWINGS ARE THE PROPERTY OF STANTEC. REPRODUCTION OR USE FOR ANY PURPOSE OTHER THAN THAT AUTHORIZED BY STANTEC IS FORBIDDEN.

NOTES:
1. ALL STORM SEWER SHALL BE RCP, CLASS 5, UNLESS OTHERWISE NOTED.
2. INSTALL DRAIN TILE PER STANDARD DETAILS AND TYPICAL SECTIONS.
3. CONTRACTOR SHALL RECONNECT ALL EXISTING PRIVATE DRAINTILE/SUMP LINES TO PROPOSED DRAINTILE ALONG NEW CURB. LOCATIONS OF THESE LINES ARE NOT KNOWN BUT SHOULD BE ANTICIPATED IN THE FIELD.
4. AT PROPERTIES WHERE NO EXISTING SUMP LINE IS FOUND, CONTRACTOR TO INSTALL STUB FROM NEW ROADWAY DRAINTILE TO THE PROPERTY LINE AT A LOCATION TO BE DETERMINED IN THE FIELD BY THE ENGINEER.
5. RAIN GARDEN LOCATIONS ARE SHOWN IN A GENERAL MANNER. FINAL RAIN GARDEN LOCATIONS AND DIMENSIONS TO BE DETERMINED BY THE ENGINEER IN THE FIELD.

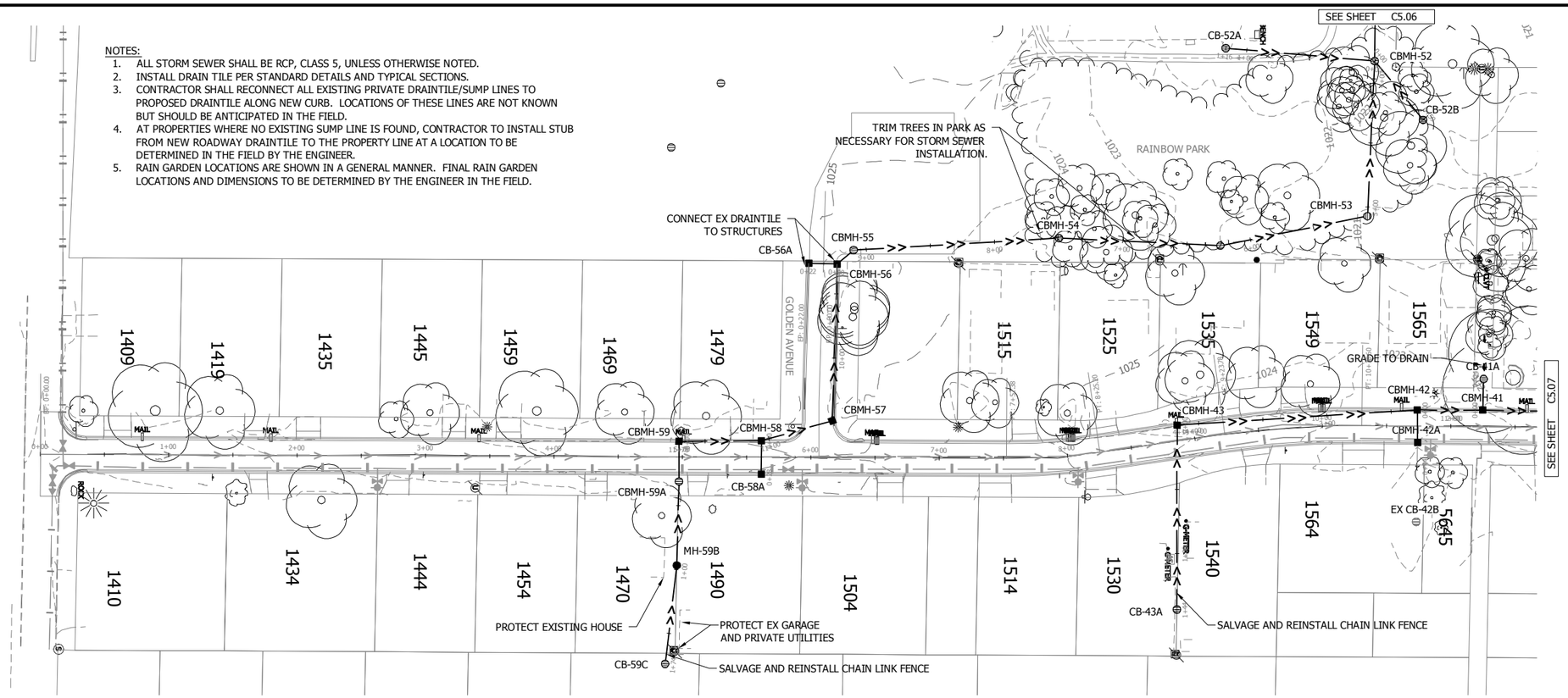


# RAINBOW AVENUE/RAINBOW PARK

0 50 100
Horizontal Scale In Feet

0 10 20
Vertical Scale In Feet

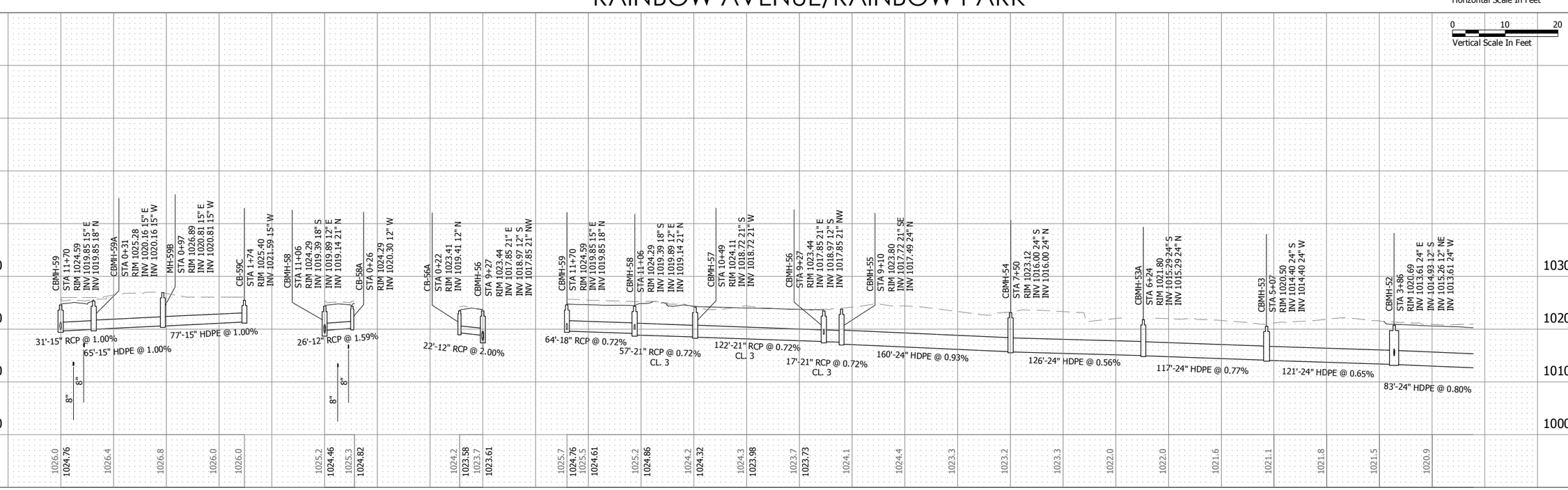


Stantec
2335 Highway 36 W
St. Paul, MN 55113
www.stantec.com

I HEREBY CERTIFY THAT THIS PLAN, SPECIFICATION OR REPORT WAS PREPARED BY ME OR UNDER MY DIRECT SUPERVISION AND THAT I AM A DULY LICENSED PROFESSIONAL ENGINEER UNDER THE LAWS OF THE STATE OF MINNESOTA.

PRINT NAME: KEVIN M. SCHIEGEL

SIGNATURE: _____
DATE: 02/20/2014 LIC. NO. 46000

CITY OF MAPLE PLAIN, MINNESOTA
MAIN ST W AND RAINBOW AVE UTILITY AND STREET IMPROVEMENTS
RAINBOW AVENUE & RAINBOW PARK
STORM SEWER PLAN & PROFILE

| NO | REVISION | DATE |
|---|---|---|
| | | |

| | |
|---|---|
| SURVEY | NHL |
| DRAWN | ACD |
| DESIGNED | KMS |
| CHECKED | KMS |
| APPROVED | DDB |
| PROJ. NO. | 193802390 |

SHEET NUMBER
C5.05

Plot Date: 02/19/2014 - 3:00pm
Drawing: P:\193802390\Civil\Drawings\193802390\CAD\Dwg\193802390_C505.dwg
Xrefs: 193802390_XSTI, 193802390_XSIT, 193802390-MAP-Adjusted, 193802390_BORDER, 193802390_XSNO, 193802390_XSSS

THE CONTRACTOR SHALL VERIFY AND BE RESPONSIBLE FOR ALL DIMENSIONS. DO NOT SCALE THE DRAWING. ANY ERRORS OR OMISSIONS SHALL BE REPORTED TO STANTEC WITHOUT DELAY. THE COPYRIGHTS TO ALL DESIGNS AND DRAWINGS ARE THE PROPERTY OF STANTEC. REPRODUCTION OR USE FOR ANY PURPOSE OTHER THAN THAT AUTHORIZED BY STANTEC IS FORBIDDEN.

NOTES:

1. ALL STORM SEWER SHALL BE RCP, CLASS 5, UNLESS OTHERWISE NOTED.
2. INSTALL DRAIN TILE PER STANDARD DETAILS AND TYPICAL SECTIONS.
3. CONTRACTOR SHALL RECONNECT ALL EXISTING PRIVATE DRAINTILE/SUMP LINES TO PROPOSED DRAINTILE ALONG NEW CURB. LOCATIONS OF THESE LINES ARE NOT KNOWN BUT SHOULD BE ANTICIPATED IN THE FIELD.
4. AT PROPERTIES WHERE NO EXISTING SUMP LINE IS FOUND, CONTRACTOR TO INSTALL STUB FROM NEW ROADWAY DRAINTILE TO THE PROPERTY LINE AT A LOCATION TO BE DETERMINED IN THE FIELD BY THE ENGINEER.
5. RAIN GARDEN LOCATIONS ARE SHOWN IN A GENERAL MANNER. FINAL RAIN GARDEN LOCATIONS AND DIMENSIONS TO BE DETERMINED BY THE ENGINEER IN THE FIELD.

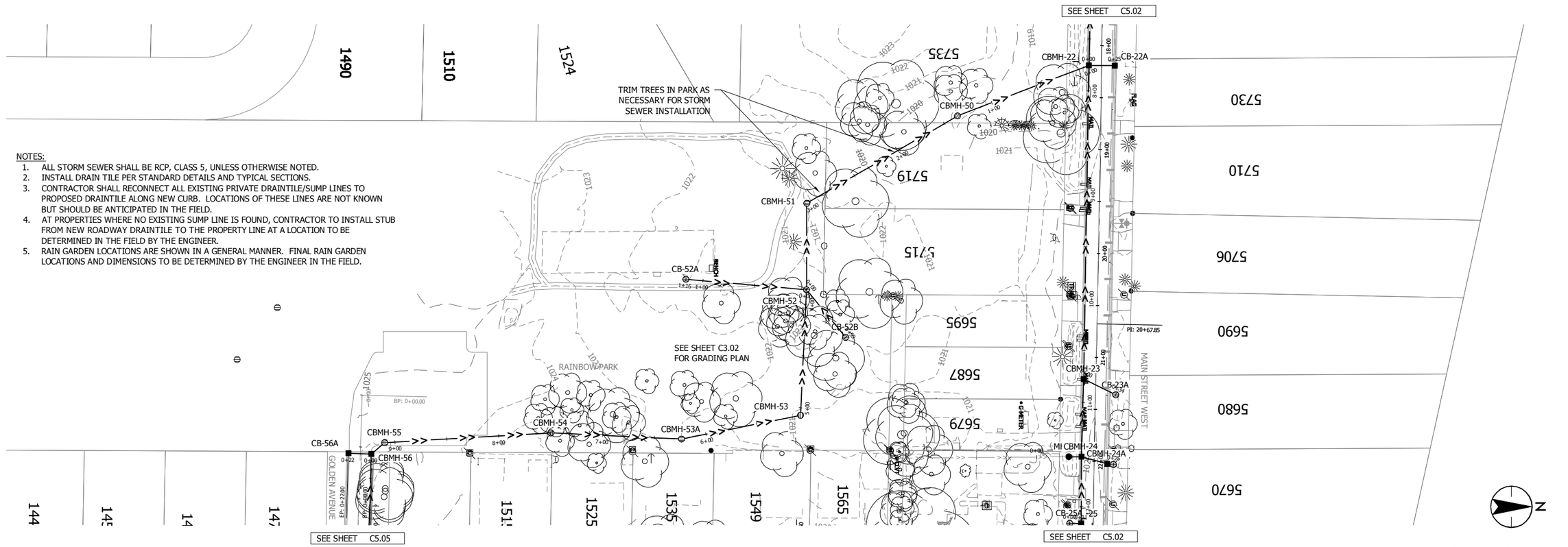


RAINBOW AVENUE/RAINBOW PARK

0 50 100
Horizontal Scale In Feet

0 10 20
Vertical Scale In Feet

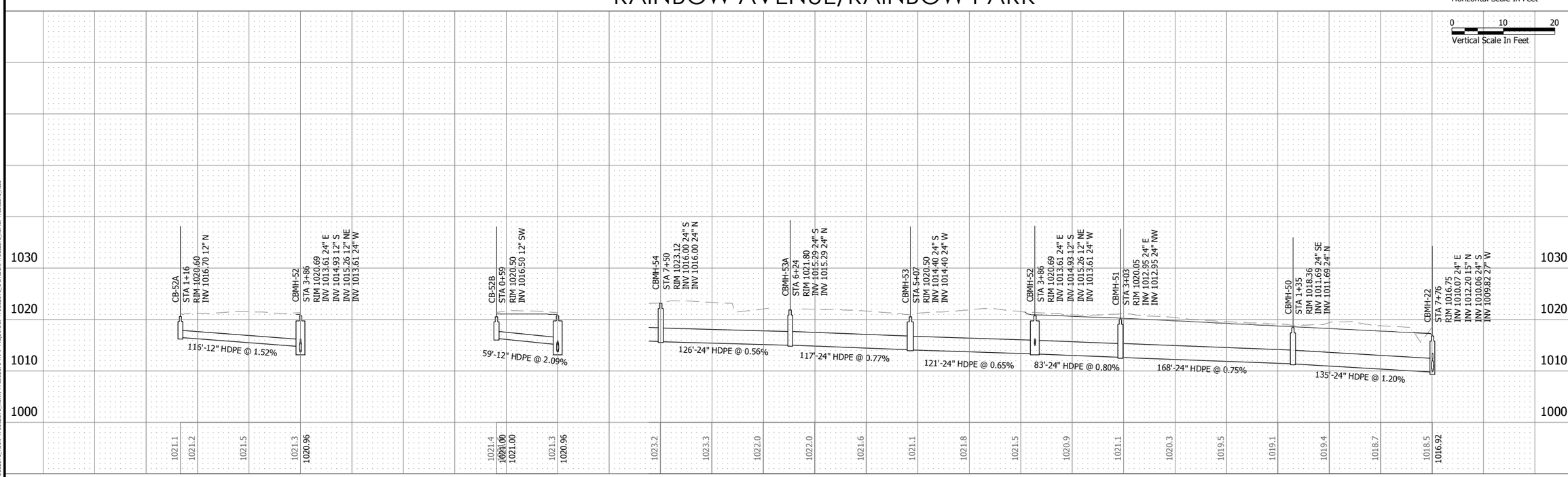


Stantec
2335 Highway 36 W
St. Paul, MN 55113
www.stantec.com

I HEREBY CERTIFY THAT THIS PLAN, SPECIFICATION OR REPORT WAS PREPARED BY ME OR UNDER MY DIRECT SUPERVISION AND THAT I AM A DULY LICENSED PROFESSIONAL ENGINEER UNDER THE LAWS OF THE STATE OF MINNESOTA.

PRINT NAME: KELLIE M. SCHIEGEL

SIGNATURE: _____
DATE: 02/20/2014 LIC. NO. 46900

# CITY OF MAPLE PLAIN, MINNESOTA

## MAIN ST W AND RAINBOW AVE UTILITY AND STREET IMPROVEMENTS

RAINBOW PARK
STORM SEWER PLAN & PROFILE

| NO | REVISION | DATE |
|---|---|---|
| | | |

| | |
|---|---|
| SURVEY | NHL |
| DRAWN | ACD |
| DESIGNED | KMS |
| CHECKED | KMS |
| APPROVED | DDB |
| PROJ. NO. | 193802390 |

SHEET NUMBER
C5.06

Plot Date: 02/19/2014 3:09pm
Drawing: P:\193802390\CAD\Civil\Plans\193802390_C-ACD_Dwg\193802390_C506.dwg
Xrefs: 193802390_XSTI 193802390 XSTI 193802390\MAP-Adjusted 193802390_B-ORDER 193802390_XSNO 193802390_XSNO 193802390_XSSS

THE CONTRACTOR SHALL VERIFY AND BE RESPONSIBLE FOR ALL DIMENSIONS. DO NOT SCALE THE DRAWING - ANY ERRORS OR OMISSIONS SHALL BE REPORTED TO STANTEC WITHOUT DELAY. THE COPYRIGHTS TO ALL DESIGNS AND DRAWINGS ARE THE PROPERTY OF STANTEC. REPRODUCTION OR USE FOR ANY PURPOSE OTHER THAN THAT AUTHORIZED BY STANTEC IS FORBIDDEN.

NOTES:

1. ALL STORM SEWER SHALL BE RCP, CLASS 5, UNLESS OTHERWISE NOTED.
2. INSTALL DRAIN TILE PER STANDARD DETAILS AND TYPICAL SECTIONS.
3. CONTRACTOR SHALL RECONNECT ALL EXISTING PRIVATE DRAINTILE/SUMP LINES TO PROPOSED DRAINTILE ALONG NEW CURB. LOCATIONS OF THESE LINES ARE NOT KNOWN BUT SHOULD BE ANTICIPATED IN THE FIELD.
4. AT PROPERTIES WHERE NO EXISTING SUMP LINE IS FOUND, CONTRACTOR TO INSTALL STUB FROM NEW ROADWAY DRAINTILE TO THE PROPERTY LINE AT A LOCATION TO BE DETERMINED IN THE FIELD BY THE ENGINEER.
5. RAIN GARDEN LOCATIONS ARE SHOWN IN A GENERAL MANNER. FINAL RAIN GARDEN LOCATIONS AND DIMENSIONS TO BE DETERMINED BY THE ENGINEER IN THE FIELD.

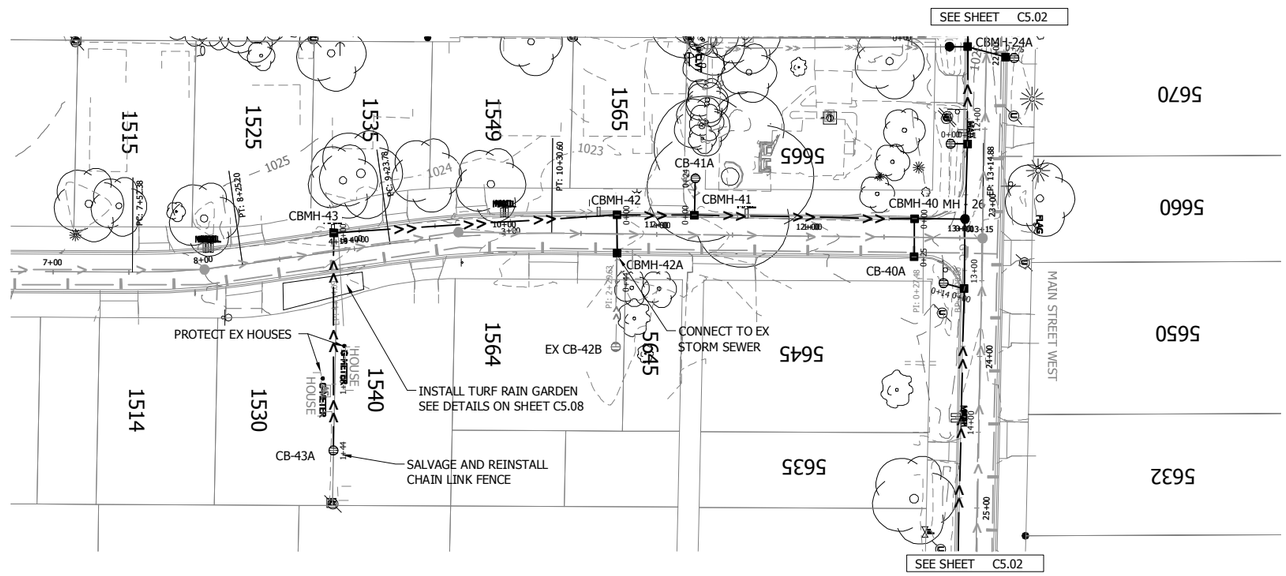


RAINBOW AVENUE

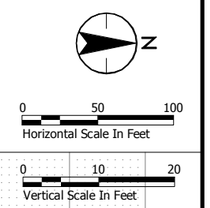


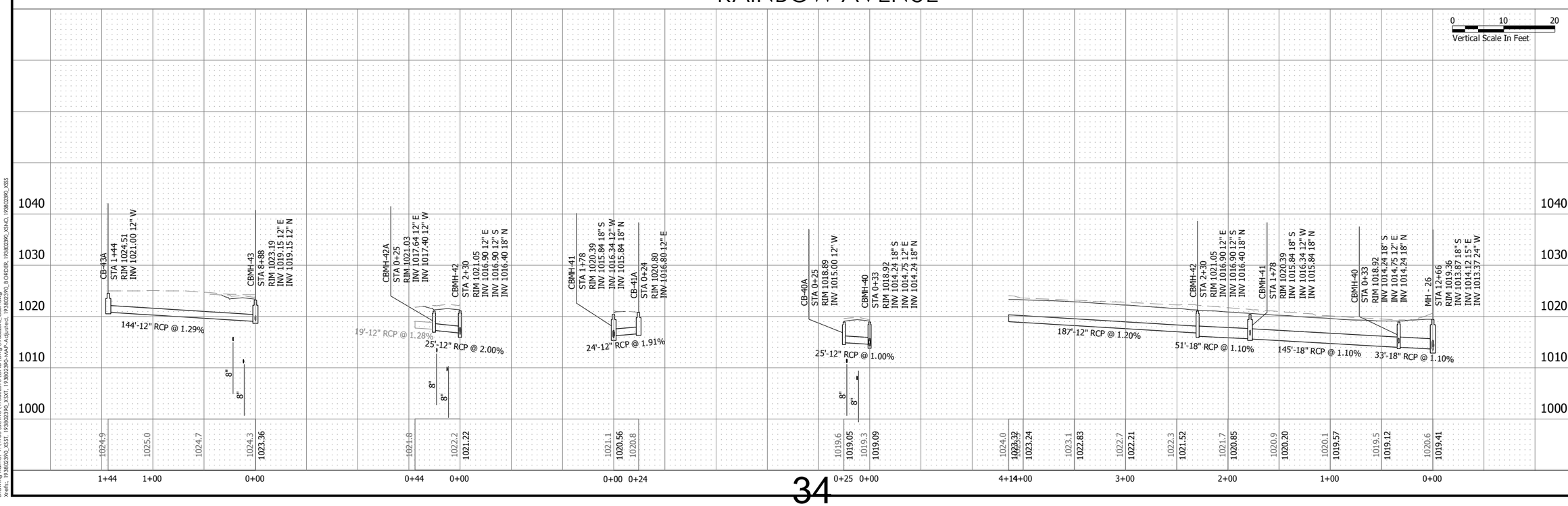


Stantec
2335 Highway 36 W
St. Paul, MN 55113
www.stantec.com

I HEREBY CERTIFY THAT THIS PLAN, SPECIFICATION OR REPORT WAS PREPARED BY ME OR UNDER MY DIRECT SUPERVISION AND THAT I AM A DULY LICENSED PROFESSIONAL ENGINEER UNDER THE LAWS OF THE STATE OF MINNESOTA.

PRINT NAME: KELLIE M. SCHIEGEL

SIGNATURE: _____

DATE: 02/20/2014 LIC. NO. 46900

# CITY OF MAPLE PLAIN, MINNESOTA

## MAIN ST W AND RAINBOW AVE UTILITY AND STREET IMPROVEMENTS

RAINBOW AVENUE

STORM SEWER PLAN & PROFILE

| NO | REVISION | DATE |
|---|---|---|
| | | |

| | |
|---|---|
| SURVEY | NHL |
| DRAWN | ACD |
| DESIGNED | KMS |
| CHECKED | KMS |
| APPROVED | DDB |
| PROJ. NO. | 193802390 |

SHEET NUMBER
C5.07



Plot Date: 02/19/2014 - 3:18pm
Drawing: P:\193802390\CAD\Drawings\Plans\193802390_C507.dwg
Xrefs: 193802390_ASST, 193802390_XSXT, 193802390-MAP-Adjusted, 193802390_BORDER, 193802390_XSNO, 193802390_XSSS

THE CONTRACTOR SHALL VERIFY AND BE RESPONSIBLE FOR ALL DIMENSIONS. DO NOT SCALE THE DRAWING - ANY ERRORS OR OMISSIONS SHALL BE REPORTED TO STANTEC WITHOUT DELAY. THE COPYRIGHTS TO ALL DESIGNS AND DRAWINGS ARE THE PROPERTY OF STANTEC. REPRODUCTION OR USE FOR ANY PURPOSE OTHER THAN THAT AUTHORIZED BY STANTEC IS FORBIDDEN.

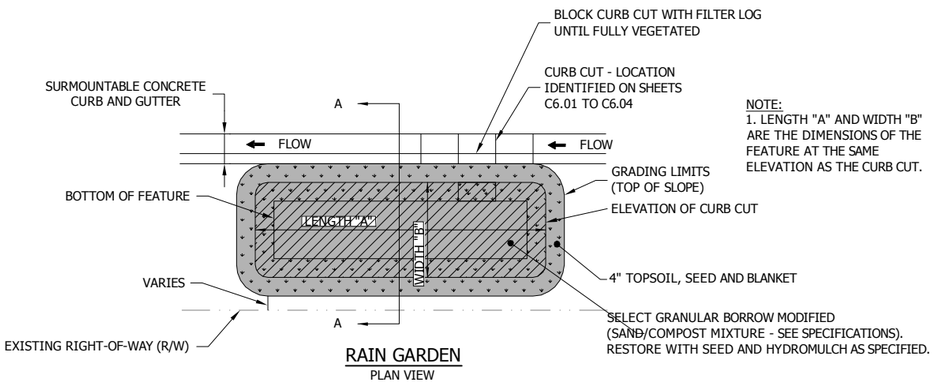


NOTE:
1. LENGTH "A" AND WIDTH "B" ARE THE DIMENSIONS OF THE FEATURE AT THE SAME ELEVATION AS THE CURB CUT.

RAIN GARDEN
PLAN VIEW

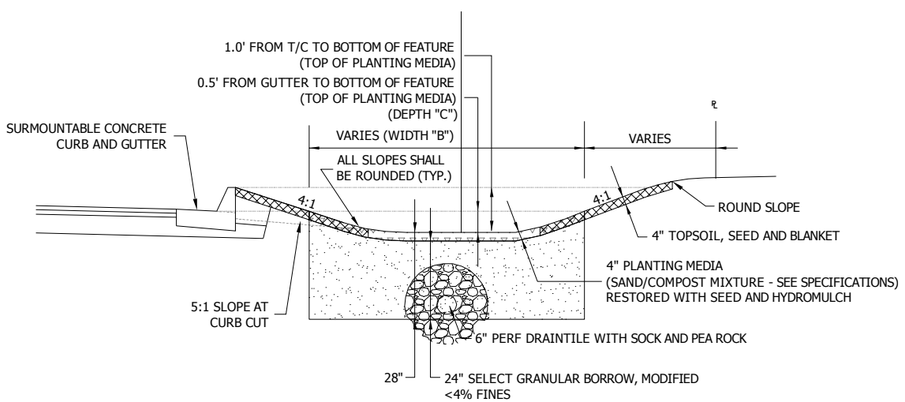


TYPICAL SECTION A-A

## TURF RAIN GARDEN DETAIL
NOT TO SCALE

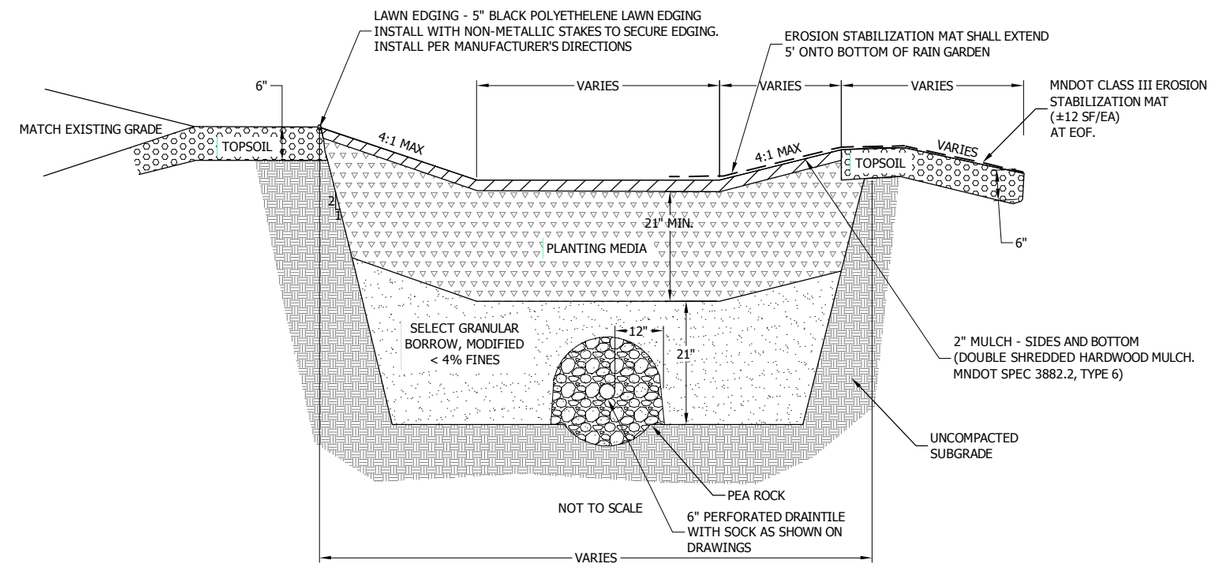


PLANTING MEDIA (DEPTH=21" MIN.)

THIS MEDIA SHALL BE CONSTRUCTED AS FOLLOWS BASED ON VOLUME:

70% CLEAN SAND, FREE OF DELETERIOUS MATERIAL
MN/DOT 3127.2B FA-1

30% ORGANIC LEAF COMPOST
MN/DOT 3890.B GRADE 2

SURFACE STABILIZATION

MULCH
PLANTINGS
NOTE:
1. RAIN GARDENS SHALL BE CONSTRUCTED AFTER DRAINAGE AREAS HAVE BEEN STABILIZED
2. RAIN GARDENS SHALL BE PROTECTED BY SILT FENCE FROM CONSTRUCTION TRAFFIC.

## PLANTINGS RAIN GARDEN DETAIL
NOT TO SCALE

Stantec
2335 Highway 36 W
St. Paul, MN 55113
www.stantec.com

I HEREBY CERTIFY THAT THIS PLAN, SPECIFICATION, OR REPORT WAS PREPARED BY ME OR UNDER MY DIRECT SUPERVISION AND THAT I AM A DULY LICENSED PROFESSIONAL ENGINEER UNDER THE LAWS OF THE STATE OF MINNESOTA.

PRINT NAME: KELLIE M. SCHIEGEL

SIGNATURE:
DATE: 02/20/2014 LIC. NO. 46900

CITY OF MAPLE PLAIN, MINNESOTA
MAIN ST W AND RAINBOW AVE UTILITY AND STREET IMPROVEMENTS
RAIN GARDEN DETAILS

| NO | REVISION | DATE |
|---|---|---|
| | | |

| | |
|---|---|
| SURVEY | NHL |
| DRAWN | ACD |
| DESIGNED | KMS |
| CHECKED | KMS |
| APPROVED | DDB |
| PROJ. NO. | 193802390 |

SHEET NUMBER
C5.08



Plot Date: 02/20/2014 - 2:45pm
Drawing: J:\2019\193802390\Active\193802390\CAD\Dwg\193802390_C5.08.dwg
Xrefs: 193802390_BORDER

THE CONTRACTOR SHALL VERIFY AND BE RESPONSIBLE FOR ALL DIMENSIONS. DO NOT SCALE THE DRAWING. ANY ERRORS OR OMISSIONS SHALL BE REPORTED TO STANTEC WITHOUT DELAY. THE COPYRIGHTS TO ALL DESIGNS AND DRAWINGS ARE THE PROPERTY OF STANTEC. REPRODUCTION OR USE FOR ANY PURPOSE OTHER THAN THAT AUTHORIZED BY STANTEC IS FORBIDDEN.

NOTES:
1. SEE SHEET C1.01 FOR TYPICAL SECTIONS.
2. CONNECT DRAINTILE INTO CATCH BASINS AS SHOWN ON DETAIL 5007.
3. ALL DIMENSIONS TO B/C UNLESS OTHERWISE NOTED.
4. CONSTRUCT 5' RESIDENTIAL CONCRETE DRIVEWAY APRON AT EACH DRIVEWAY PER STANDARD DETAILS.
5. PATCH AREA BETWEEN APRON AND EXISTING DRIVEWAY PER TYPICAL SECTIONS ON C1.01.

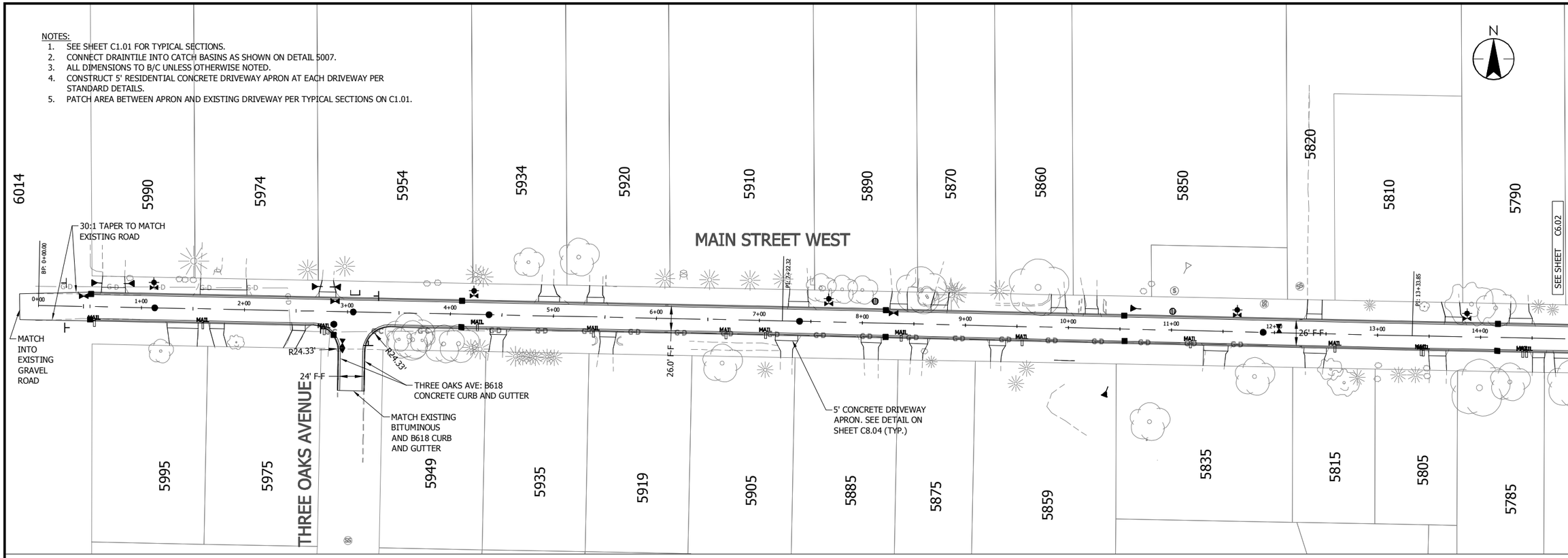


## MAIN STREET WEST

Horizontal Scale In Feet: 0 50 100

Vertical Scale In Feet: 0 10 20

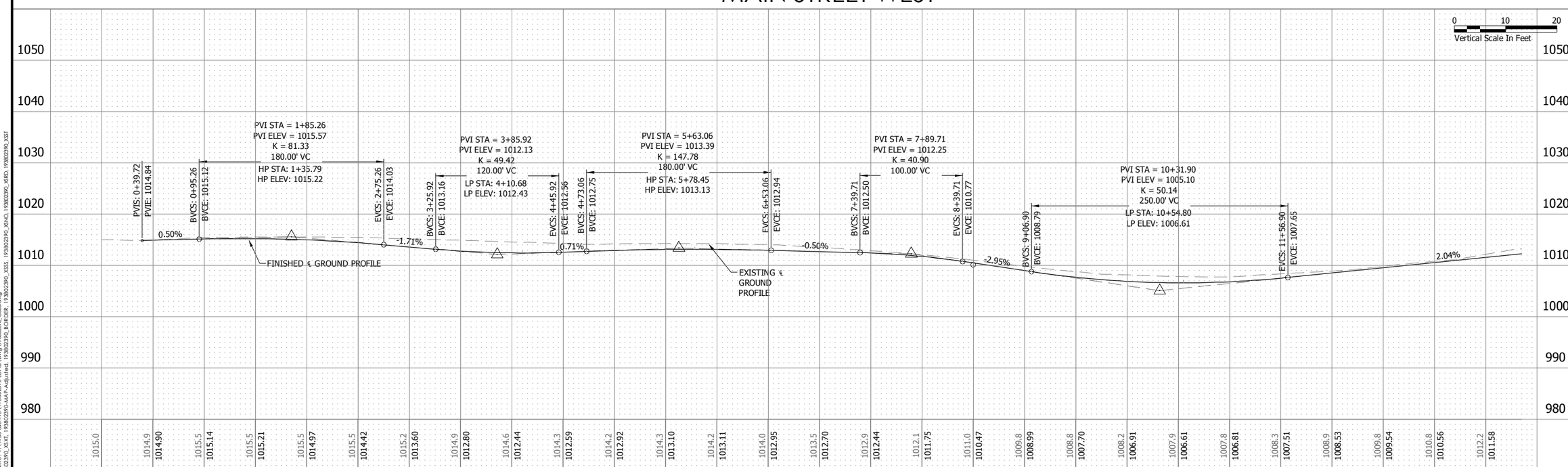


Stantec
2335 Highway 36 W
St. Paul, MN 55113
www.stantec.com

I HEREBY CERTIFY THAT THIS PLAN, SPECIFICATION OR REPORT WAS PREPARED BY ME OR UNDER MY DIRECT SUPERVISION AND THAT I AM A DULY LICENSED PROFESSIONAL ENGINEER UNDER THE LAWS OF THE STATE OF MINNESOTA.

PRINT NAME: KELLIE M. SCHIEGEL

SIGNATURE:

DATE: 02/20/2014 LIC. NO. 46700

# CITY OF MAPLE PLAIN, MINNESOTA

## MAIN ST W AND RAINBOW AVE UTILITY AND STREET IMPROVEMENTS

MAIN STREET WEST
STREET PLAN AND PROFILE

| NO | REVISION | DATE |
|---|---|---|
| | | |

| | |
|---|---|
| SURVEY | NHL |
| DRAWN | ACD |
| DESIGNED | KMS |
| CHECKED | KMS |
| APPROVED | DDB |
| PROJ. NO. | 193802390 |

SHEET NUMBER
C6.01



Plot Date: 02/14/2014 2:35pm
Drawing: J:\193802390\Design\Drawings\193802390\C-ALTA Dwg\193802390_C600.dwg
Xrefs: 193802390_XXT, 193802390-MAP-Adjusted, 193802390_BORDER, 193802390_XSS3, 193802390_XSH0, 193802390_XSRD, 193802390_XSST

THE CONTRACTOR SHALL VERIFY AND BE RESPONSIBLE FOR ALL DIMENSIONS. DO NOT SCALE THE DRAWING. ANY ERRORS OR OMISSIONS SHALL BE REPORTED TO STANTEC WITHOUT DELAY. THE COPYRIGHTS TO ALL DESIGNS AND DRAWINGS ARE THE PROPERTY OF STANTEC. REPRODUCTION OR USE FOR ANY PURPOSE OTHER THAN THAT AUTHORIZED BY STANTEC IS FORBIDDEN.

NOTES:
1. SEE SHEET C1.01 FOR TYPICAL SECTIONS.
2. CONNECT DRAINTILE INTO CATCH BASINS AS SHOWN ON DETAIL 5007.
3. ALL DIMENSIONS TO B/C UNLESS OTHERWISE NOTED.
4. CONSTRUCT 5' RESIDENTIAL CONCRETE DRIVEWAY APRON AT EACH DRIVEWAY PER STANDARD DETAILS.
5. PATCH AREA BETWEEN APRON AND EXISTING DRIVEWAY PER TYPICAL SECTIONS ON C1.01.

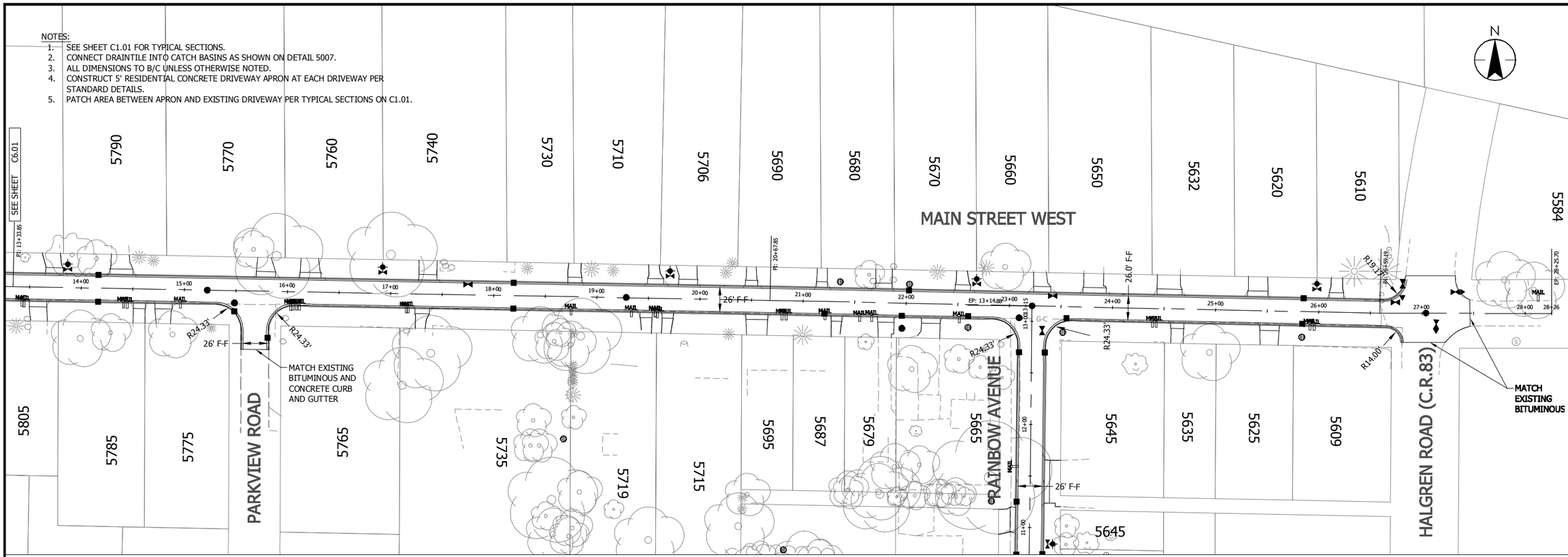


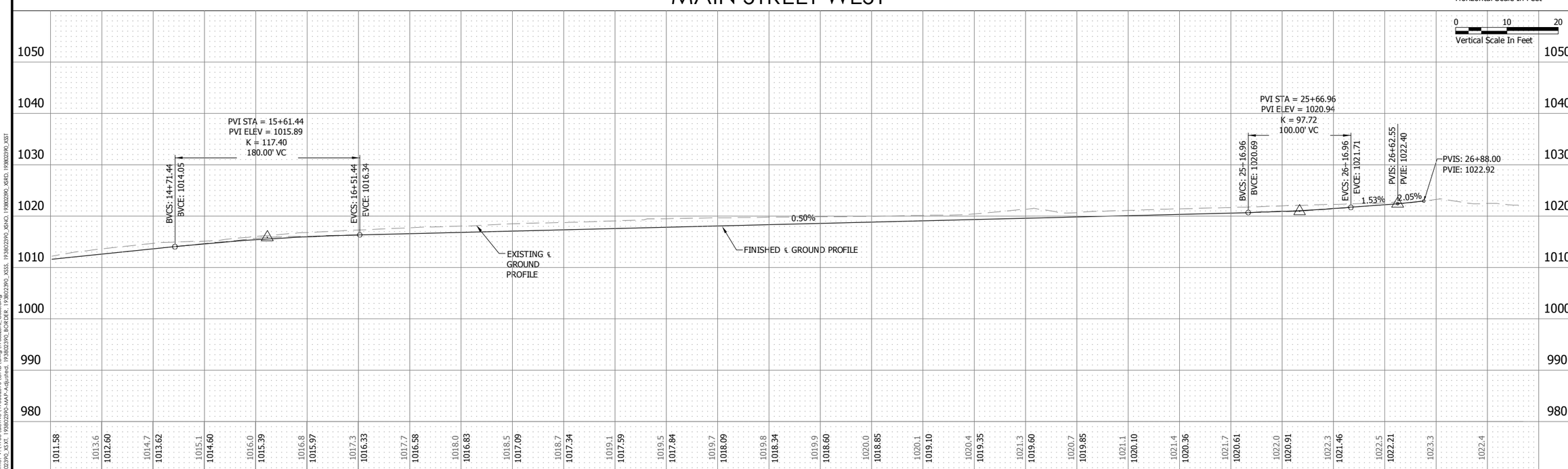


Stantec
2335 Highway 36 W
St. Paul, MN 55113
www.stantec.com

I HEREBY CERTIFY THAT THIS PLAN, SPECIFICATION OR REPORT WAS PREPARED BY ME OR UNDER MY DIRECT SUPERVISION AND THAT I AM A DULY LICENSED PROFESSIONAL ENGINEER UNDER THE LAWS OF THE STATE OF MINNESOTA.
PRINT NAME: KELLIE M. SCHLEGEL
SIGNATURE:
DATE: 02/20/2014 LIC. NO. 46300

# CITY OF MAPLE PLAIN, MINNESOTA
## MAIN ST W AND RAINBOW AVE UTILITY AND STREET IMPROVEMENTS
MAIN STREET WEST
STREET PLAN AND PROFILE

| NO | REVISION | DATE |
|---|---|---|
| | | |

| | |
|---|---|
| SURVEY | NNL |
| DRAWN | ACD |
| DESIGNED | KMS |
| CHECKED | KMS |
| APPROVED | DDB |
| PROJ. NO. | 193802390 |

SHEET NUMBER
C6.02

THE CONTRACTOR SHALL VERIFY AND BE RESPONSIBLE FOR ALL DIMENSIONS. DO NOT SCALE THE DRAWING - ANY ERRORS OR OMISSIONS SHALL BE REPORTED TO STANTEC WITHOUT DELAY. THE COPYRIGHTS TO ALL DESIGNS AND DRAWINGS ARE THE PROPERTY OF STANTEC. REPRODUCTION OR USE FOR ANY PURPOSE OTHER THAN THAT AUTHORIZED BY STANTEC IS FORBIDDEN.

NOTES:
1. SEE SHEET C1.01 FOR TYPICAL SECTIONS.
2. CONNECT DRAINTILE INTO CATCH BASINS AS SHOWN ON DETAIL 5007.
3. ALL DIMENSIONS TO B/C UNLESS OTHERWISE NOTED.
4. CONSTRUCT 5' RESIDENTIAL CONCRETE DRIVEWAY APRON AT EACH DRIVEWAY PER STANDARD DETAILS.
5. PATCH AREA BETWEEN APRON AND EXISTING DRIVEWAY PER TYPICAL SECTIONS ON C1.01.

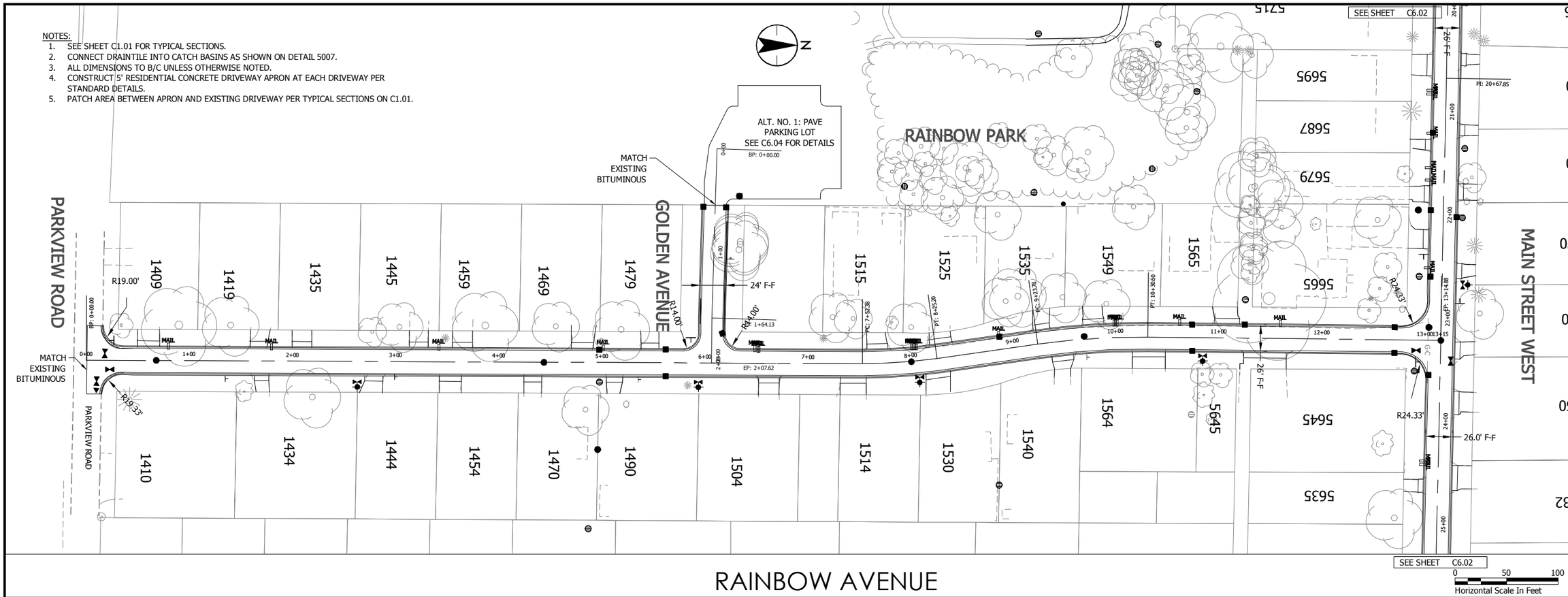


Stantec
2335 Highway 36 W
St. Paul, MN 55113
www.stantec.com

I HEREBY CERTIFY THAT THIS PLAN, SPECIFICATION OR REPORT WAS PREPARED BY ME OR UNDER MY DIRECT SUPERVISION AND THAT I AM A DULY LICENSED PROFESSIONAL ENGINEER UNDER THE LAWS OF THE STATE OF MINNESOTA.

PRINT NAME: KELLIE M. SCHIEGEL

SIGNATURE:
DATE: 02/20/2014 LIC. NO. 46900

# CITY OF MAPLE PLAIN, MINNESOTA

## MAIN ST W AND RAINBOW AVENUE UTILITY AND STREET IMPROVEMENTS

RAINBOW AVENUE
STREET PLAN AND PROFILE

| NO | REVISION | DATE |
|---|---|---|
| | | |

| | |
|---|---|
| SURVEY | NHL |
| DRAWN | ACD |
| DESIGNED | KMS |
| CHECKED | KMS |
| APPROVED | DDB |
| PROJ. NO. | 193802390 |

SHEET NUMBER
C6.03



Plot Date: 02/14/2014 2:40pm
Drawing: J:\193802390\CAD\Civil\Plans\193802390_C-6D.dwg
Xrefs: 193802390_XSTI, 193802390-MAP-Adjusted, 193802390_BORDER, 193802390_XSSS, 193802390_XSHO, 193802390_XSRD, 193802390_XSST

THE CONTRACTOR SHALL VERIFY AND BE RESPONSIBLE FOR ALL DIMENSIONS. DO NOT SCALE THE DRAWING - ANY ERRORS OR OMISSIONS SHALL BE REPORTED TO STANTEC WITHOUT DELAY. THE COPYRIGHTS TO ALL DESIGNS AND DRAWINGS ARE THE PROPERTY OF STANTEC. REPRODUCTION OR USE FOR ANY PURPOSE OTHER THAN THAT AUTHORIZED BY STANTEC IS FORBIDDEN.

ALT. NO. 1 NOTES:
1. SEE SHEET C1.01 FOR PAVEMENT SECTION.
2. PAVING PARK PARKING LOT INCLUDES SHAPING EXISTING CLASS 5 AND ADDING ADDITIONAL CLASS 5 AGGREGATE TO EXISTING GRAVEL PARKING LOT AS DIRECTED BY THE ENGINEER TO ALLOW FOR PROPER DRAINAGE WHEN PAVED.

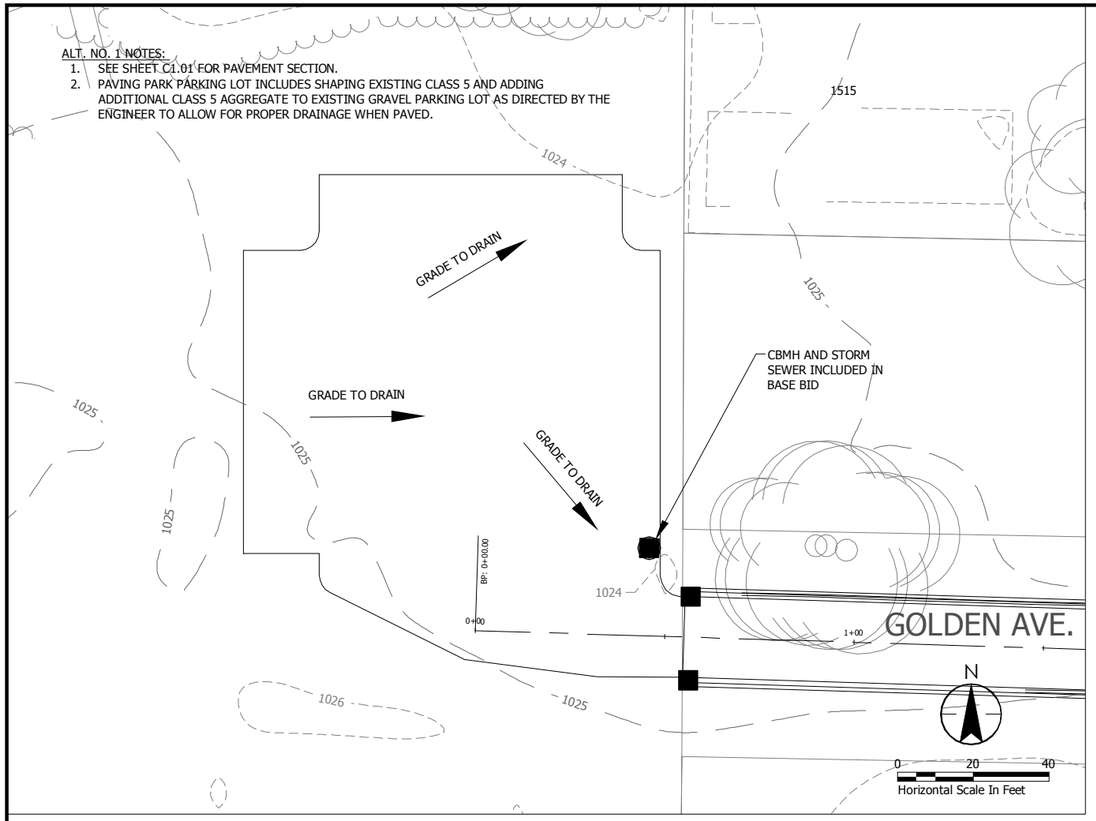


## ALT. #1: RAINBOW PARK PARKING LOT

NOTES:
1. SEE SHEET C1.01 FOR TYPICAL SECTIONS.
2. CONNECT DRAINTILE INTO CATCH BASINS AS SHOWN ON DETAIL 5007.
3. ALL DIMENSIONS TO B/C UNLESS OTHERWISE NOTED.
4. CONSTRUCT 5' RESIDENTIAL CONCRETE DRIVEWAY APRON AT EACH DRIVEWAY PER STANDARD DETAILS.
5. PATCH AREA BETWEEN APRON AND EXISTING DRIVEWAY PER TYPICAL SECTIONS ON C1.01.

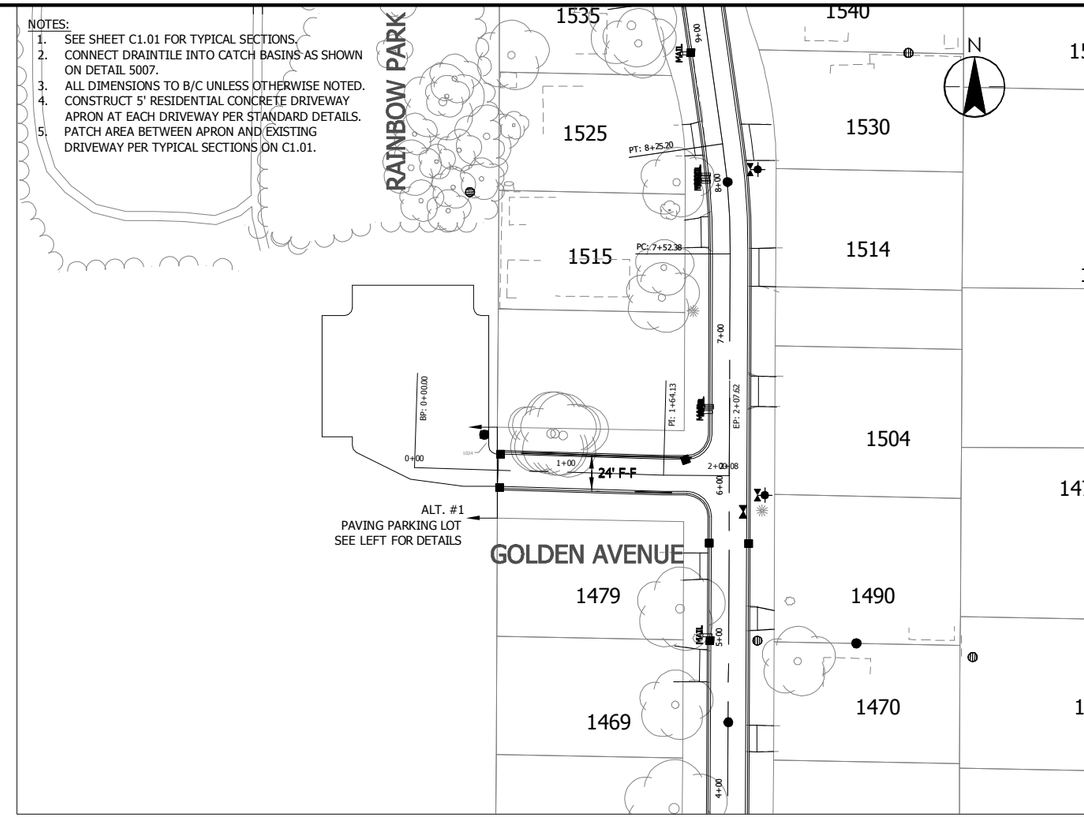


## GOLDEN AVENUE

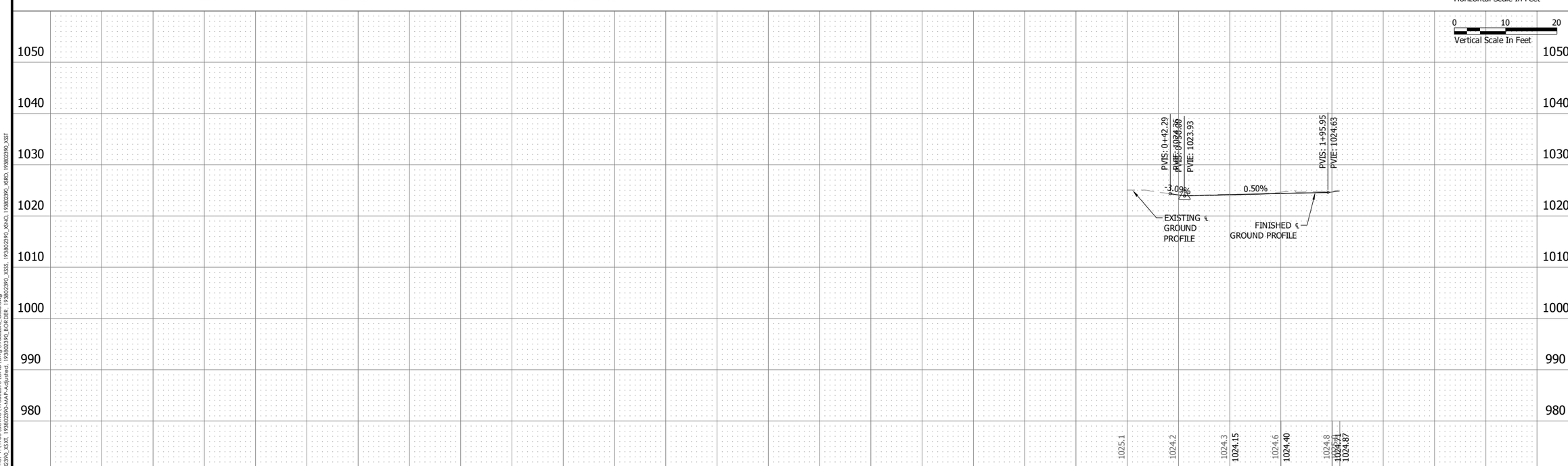


Stantec
2335 Highway 36 W
St. Paul, MN 55113
www.stantec.com

I HEREBY CERTIFY THAT THIS PLAN, SPECIFICATION OR REPORT WAS PREPARED BY ME OR UNDER MY DIRECT SUPERVISION AND THAT I AM A DULY LICENSED PROFESSIONAL ENGINEER UNDER THE LAWS OF THE STATE OF MINNESOTA.

PRINT NAME: KELLIE M. SCHIEGEL

SIGNATURE: _____ LIC. NO. 46900

DATE: 02/20/2014

# CITY OF MAPLE PLAIN, MINNESOTA

MAIN ST W AND RAINBOW AVE UTILITY AND STREET IMPROVEMENTS
GOLDEN AVE & ALT. #1 RAINBOW PARK
STREET IMPROVEMENT PLAN

| NO | REVISION | DATE |
|---|---|---|
| | | |

| | |
|---|---|
| SURVEY | NHL |
| DRAWN | ACD |
| DESIGNED | KMS |
| CHECKED | KMS |
| APPROVED | DDB |
| PROJ. NO. | 193802390 |

SHEET NUMBER
C6.04



Plot Date: 02/19/2014 - 3:35pm
Drawing: \\corp.stantec.com\ent_193802390_Maple Plain\193802390\CADD\Dwg\193802390_C600.dwg
Xrefs: 193802390_XXT, 193802390-MAP-Adjusted, 193802390_BORDER, 193802390_XSSS, 193802390_XSHO, 193802390_XSRD, 193802390_XSST

THE CONTRACTOR SHALL VERIFY AND BE RESPONSIBLE FOR ALL DIMENSIONS. DO NOT SCALE THE DRAWING. ALL DESIGNS, DRAWINGS AND SPECIFICATIONS ARE THE PROPERTY OF STANTEC. REPRODUCTION OR USE FOR ANY PURPOSE OTHER THAN THAT AUTHORIZED BY STANTEC IS FORBIDDEN.

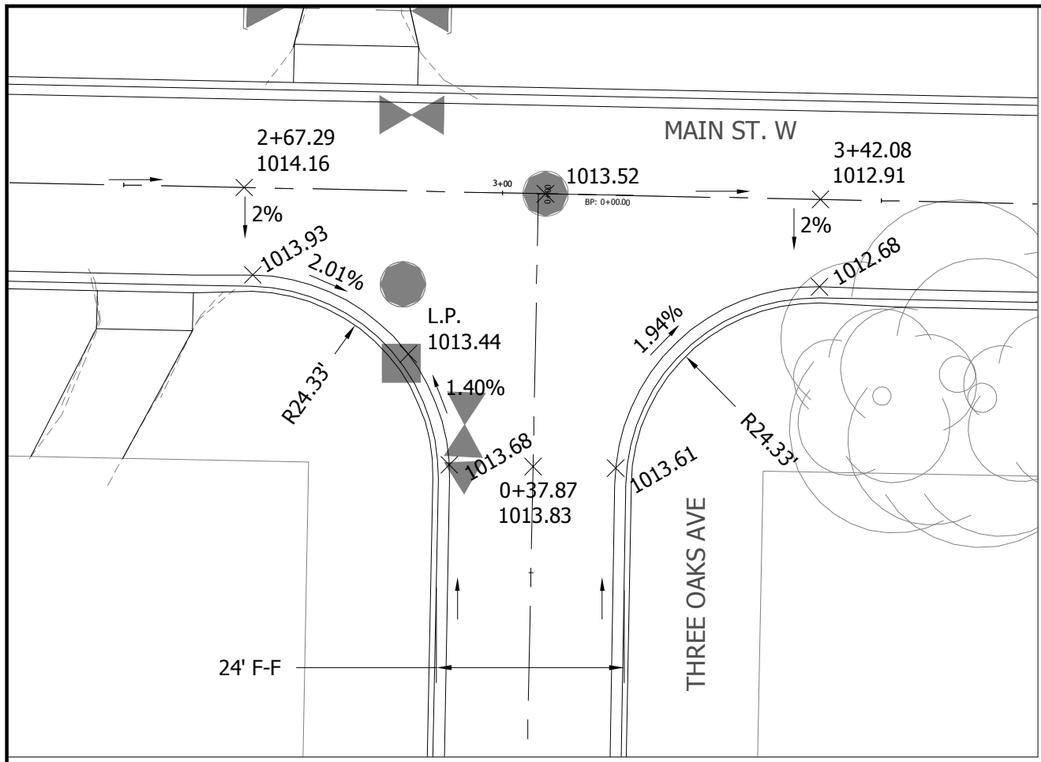


MAIN STREET WEST & THREE OAKS AVE

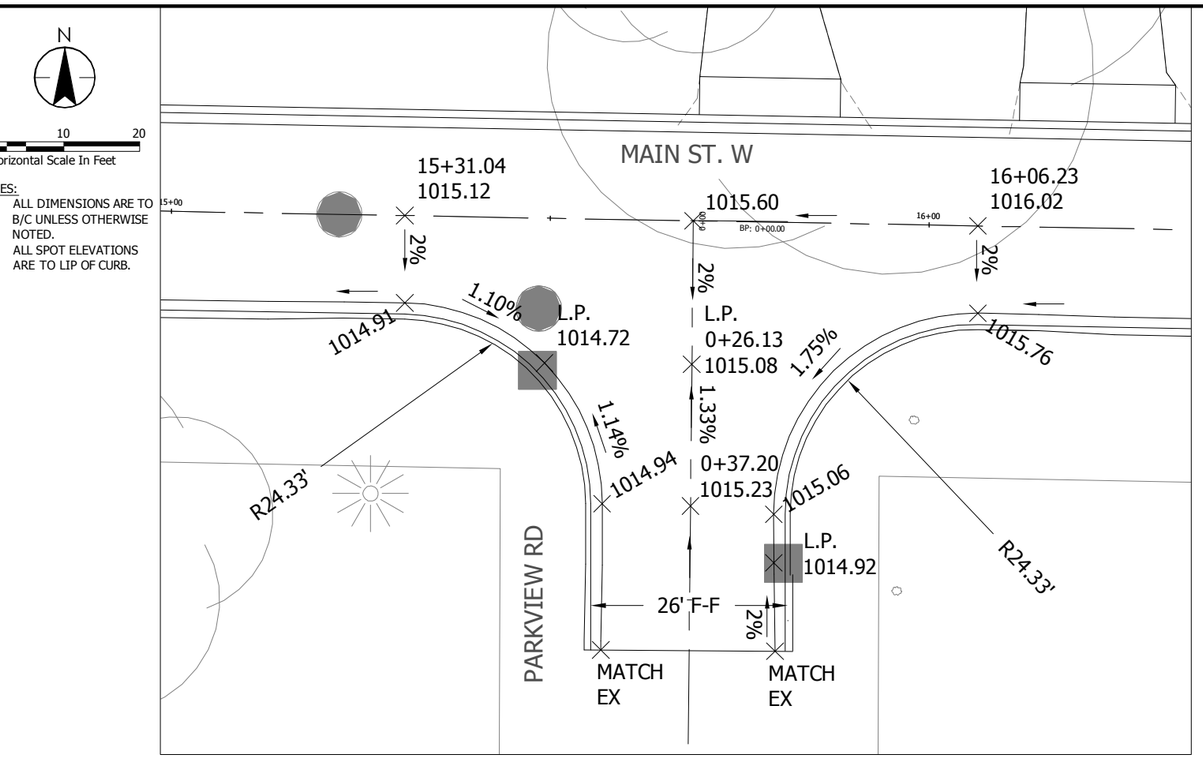


MAIN STREET WEST & PARKVIEW RD

N

0 10 20
Horizontal Scale In Feet

NOTES:
1. ALL DIMENSIONS ARE TO B/C UNLESS OTHERWISE NOTED.
2. ALL SPOT ELEVATIONS ARE TO LIP OF CURB.

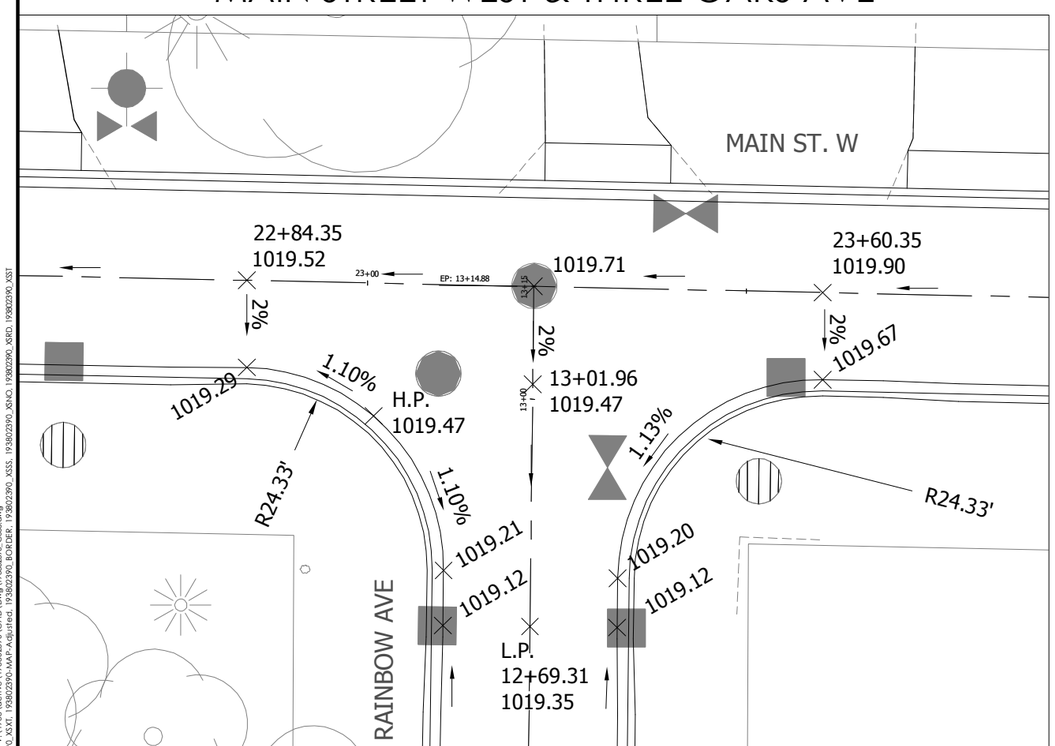


MAIN STREET WEST & RAINBOW AVE

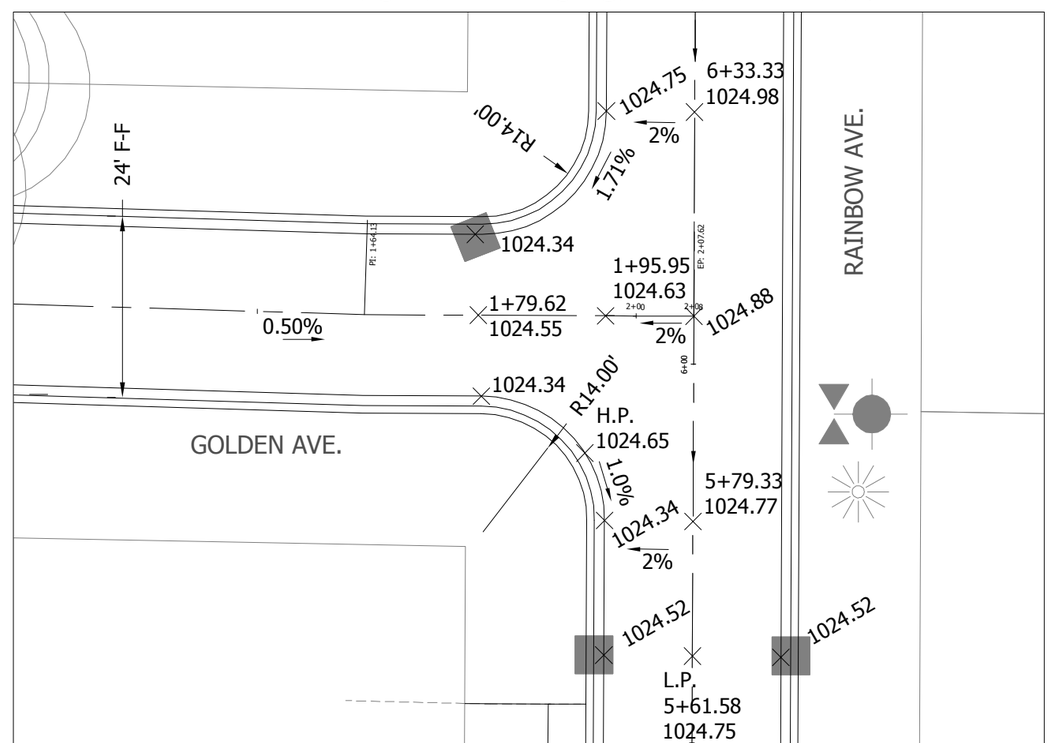


RAINBOW AVE & GOLDEN AVE

Stantec
2335 Highway 36 W
St. Paul, MN 55113
www.stantec.com

I HEREBY CERTIFY THAT THIS PLAN, SPECIFICATION OR REPORT WAS PREPARED BY ME OR UNDER MY DIRECT SUPERVISION AND THAT I AM A DULY LICENSED PROFESSIONAL ENGINEER UNDER THE LAWS OF THE STATE OF MINNESOTA.

PRINT NAME: KELLIE M. SCHIEGEL

SIGNATURE:
DATE: 02/20/2014 LIC. NO. 46900

CITY OF MAPLE PLAIN, MINNESOTA
MAIN ST W AND RAINBOW AVE UTILITY AND STREET IMPROVEMENTS
INTERSECTION DETAILS

| NO | REVISION | DATE |
|---|---|---|
| | | |

| | |
|---|---|
| SURVEY | NHL |
| DRAWN | ACD |
| DESIGNED | KMS |
| CHECKED | KMS |
| APPROVED | DDB |
| PROJ. NO. | 193802390 |

SHEET NUMBER
C6.05

THE CONTRACTOR SHALL VERIFY AND BE RESPONSIBLE FOR ALL DIMENSIONS. DO NOT SCALE THE DRAWING - ANY ERRORS OR OMISSIONS SHALL BE REPORTED TO STANTEC WITHOUT DELAY. THE COPYRIGHTS TO ALL DESIGNS AND DRAWINGS ARE THE PROPERTY OF STANTEC. REPRODUCTION OR USE FOR ANY PURPOSE OTHER THAN THAT AUTHORIZED BY STANTEC IS FORBIDDEN.

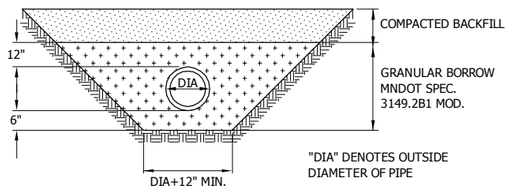


PIPE FOUNDATION & BEDDING
GOOD SOILS

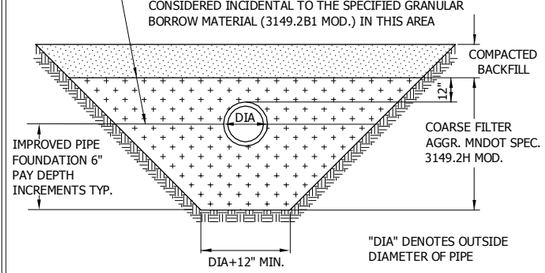


IMPROVED PIPE FOUNDATION
MATERIAL POOR SOILS

Stantec

PIPE FOUNDATION & BEDDING
METHODS FOR PVC

LAST REVISION: March 2002

PLATE NO. 1001

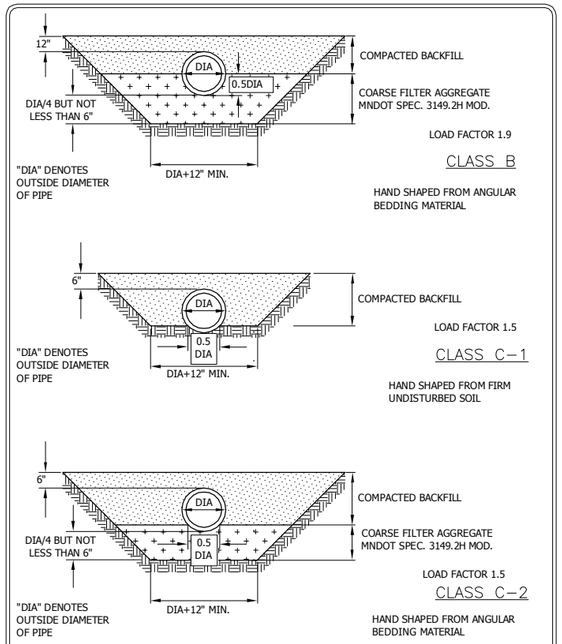


Stantec

PIPE FOUNDATION & BEDDING
METHODS FOR RCP OR DIP

LAST REVISION: March 2002

PLATE NO. 1002

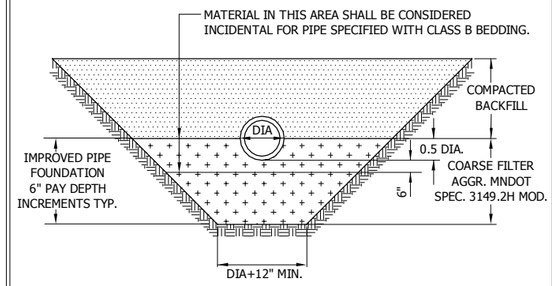


Stantec

IMPROVED PIPE FOUNDATION
FOR RCP AND DIP

LAST REVISION: March 2002

PLATE NO. 1003

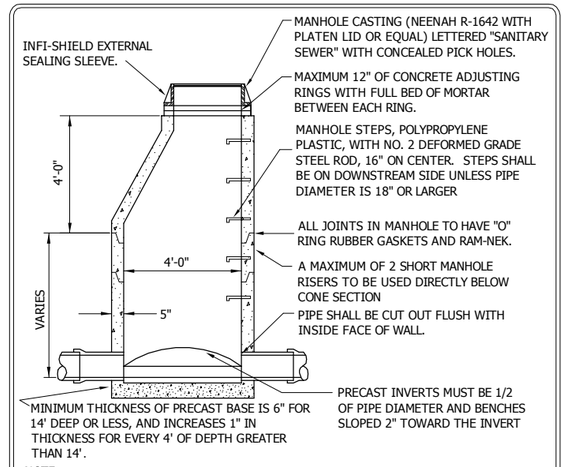


NOTE:
1. KOR-N-SEAL MANHOLE OR EQUAL CONSIDERED ACCEPTABLE ALTERNATE.
2. ALL DOG HOUSES SHALL BE GROUTED ON INSIDE AND OUTSIDE.
3. WHEN THE MANHOLE OR CATCH BASIN STRUCTURE IS CONSTRUCTED OUTSIDE THE TRAVELED ROADWAY A WITNESS POST AND SIGN SHALL BE INSTALLED NEXT TO THE MANHOLE.
4. IRON MANHOLE ADJUSTING RINGS (NEENAH R-1979 OR APPROVED EQUAL) MAY BE USED WHEN RAISING CASTING RIM ELEVATION ABOVE THE STREET BASE COURSE. THE ADJUSTING RING SHOULD BE SEALED TO THE CASTING FRAME WITH EBS SUPER GLUE OR APPROVED EQUAL.

SECTION

Stantec

SANITARY MANHOLE STANDARD

LAST REVISION: OCT 1999

PLATE NO. 2001

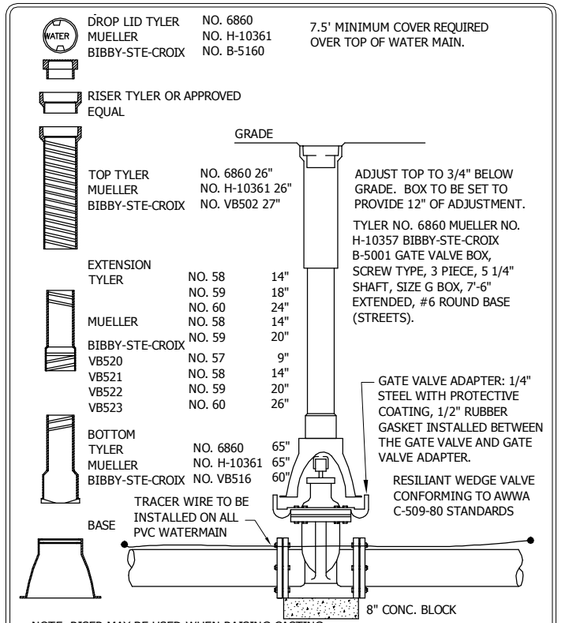


NOTE: RISER MAY BE USED WHEN RAISING CASTING RIM ELEVATION ABOVE STREET BASE COURSE.

Stantec

GATE VALVE AND BOX
INSTALLATION

LAST REVISION: OCT 1999

PLATE NO. 3001

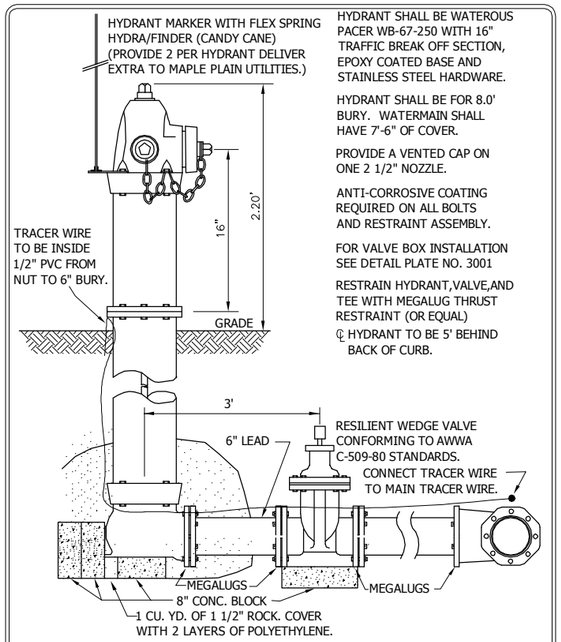


Stantec

TYPICAL HYDRANT DETAIL

LAST REVISION: APR 2007

PLATE NO. 3002

NOTES:
1. SHAPE OF BACK OF BUTTRESS MAY VARY AS LONG AS POURED AGAINST FIRM UNDISTURBED EARTH.
2. DIMENSION C1,C2,C3 SHOULD BE LARGE ENOUGH TO MAKE ANGLE Θ EQUAL TO OR LARGER THAN 45°.
3. DIMENSION A1,A2,A3 SHOULD BE AS LARGE AS POSSIBLE WITHOUT INTERFERING WITH MJ BOLTS.
4. Θ = 45° MINIMUM.
5. PLACE POLYETHYLENE BETWEEN CONCRETE & PIPE.
6. ALL BENDS & FITTINGS SHALL BE RESTRAINED WITH MEGALUGS THRUST RESTRAINTS OR EQUAL

BUTTRESS DIMENSIONS

| PIPE SIZE | 22 1/2° BEND | | 45° BEND | | 90° BEND/TEE | |
|---|---|---|---|---|---|---|
| | B1 | D1 | B2 | D2 | B3 | D3 |
| 6" | 1'-5" | 1'-5" | 1'-5" | 1'-5" | 2'-1" | 1'-6" |
| 8" | 1'-5" | 1'-5" | 2'-1" | 1'-6" | 2'-8" | 2'-0" |
| 12" | 1'-10" | 1'-10" | 3'-4" | 2'-0" | 4'-9" | 2'-6" |
| 16" | 3'-0" | 2'-0" | 3'-10" | 3'-0" | 6'-2" | 3'-6" |
| 20" | 3'-6" | 2'-8" | 5'-6' | 3'-4" | 8'-4" | 4'-0" |
| 24" | 4'-4" | 3'-0" | 6'-10" | 3'-10" | 9'-8" | 5'-0" |
| 30" | - | - | 9'-3" | 6'-0" | 17'-0" | 6'-0" |

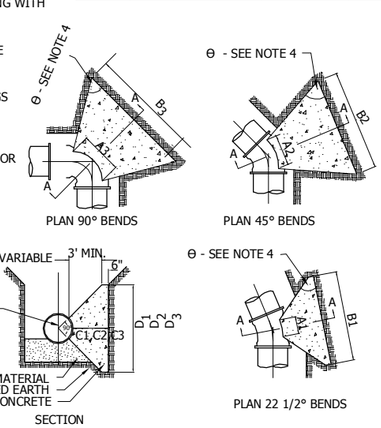


Stantec

CONCRETE THRUST BLOCK

LAST REVISION: OCT 1999

PLATE NO. 3003

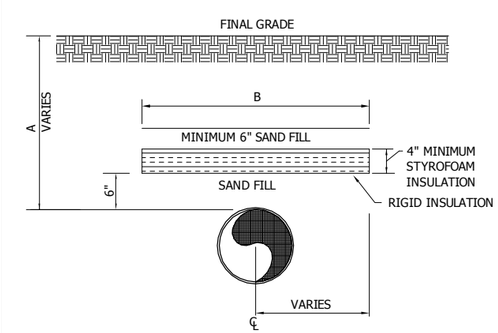


NOTE:
PIPE SHALL BE CENTERED UNDER INSULATION UNLESS OTHERWISE SPECIFIED.

| COVER OVER PIPE - A | WIDTH OF INSULATING BOARD - B |
|---|---|
| 5' | 5' |
| 6' | 3' |

Stantec

INSULATION DETAIL

LAST REVISION: OCT 1999

PLATE NO. 3004

Stantec
2335 Highway 36 W
St. Paul, MN 55113
www.stantec.com

I HEREBY CERTIFY THAT THIS PLAN, SPECIFICATION OR REPORT WAS PREPARED BY ME OR UNDER MY DIRECT SUPERVISION AND THAT I AM A DULY LICENSED PROFESSIONAL ENGINEER UNDER THE LAWS OF THE STATE OF MINNESOTA.

PRINT NAME: KELLIE M. SCHIEGEL

SIGNATURE: DATE: 02/20/2014 LIC. NO. 46900

# CITY OF MAPLE PLAIN, MINNESOTA

## MAIN ST W AND RAINBOW AVE UTILITY AND STREET IMPROVEMENTS

STANDARD DETAILS

| NO | REVISION | DATE |
|---|---|---|
| | | |

| | |
|---|---|
| SURVEY | NHL |
| DRAWN | ACD |
| DESIGNED | KMS |
| CHECKED | KMS |
| APPROVED | DDB |
| PROJ. NO. | 193802390 |

SHEET NUMBER
C8.01

Plot Date: 02/20/2014 1:01pm
Drawing: P:\193802390\CAD\Sheet\193802390\C-AD\Dwg\193802390_C801.dwg
Xrefs: "2331141 & BORDER 193802390 BORDER"

THE CONTRACTOR SHALL VERIFY AND BE RESPONSIBLE FOR ALL DIMENSIONS. DO NOT SCALE THE DRAWING - ANY ERRORS OR OMISSIONS SHALL BE REPORTED TO STANTEC WITHOUT DELAY. THE COPYRIGHTS TO ALL DESIGNS AND DRAWINGS ARE THE PROPERTY OF STANTEC. REPRODUCTION OR USE FOR ANY PURPOSE OTHER THAN THAT AUTHORIZED BY STANTEC IS FORBIDDEN.

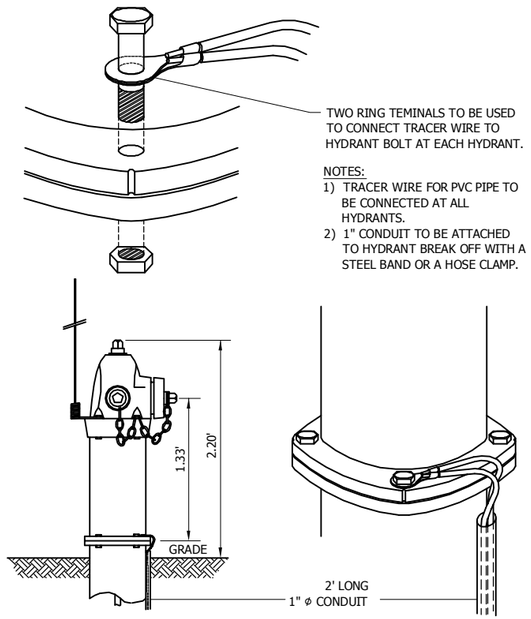


TRACER WIRE FOR PVC WATER MAIN

LAST REVISION: APRIL 2008

PLATE NO. 3005

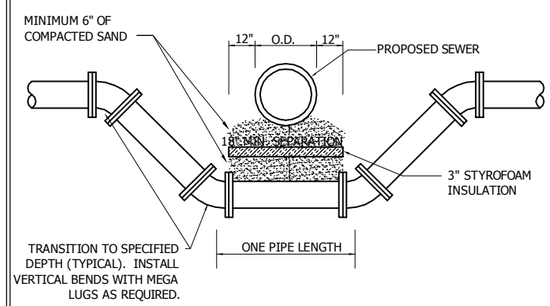


WATERMAIN UNDER STORM SEWER

WATERMAIN OFFSET DETAIL

LAST REVISION: OCT 2007

PLATE NO. 3006

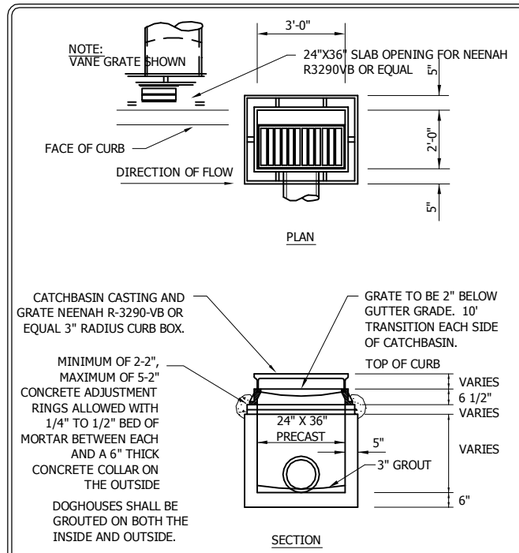


NOTES:
1. STEPS SHALL BE PROVIDED IN ALL CATCH BASIN/MANHOLES AND STORM SEWER MANHOLES.
2. CASTING TO BE TOTALLY ENCASED IN CONCRETE CURB SECTION.
3. NO BLOCK STRUCTURES ARE ALLOWED.
4. TOP OF CURB BOX SHALL HAVE "DUMP NO WASTE DRAINS TO FRESH WATER" LOGO OR APPROVED EQUAL. LOGO TO BE CAST INTO CURB BOX WITH RAISED LETTERS.

STORM SEWER CATCH BASIN

LAST REVISION: OCT 1999

PLATE NO. 5001

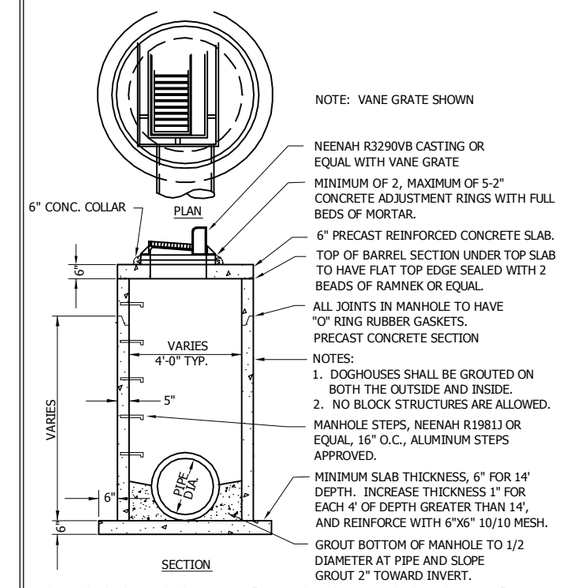


NOTE: TOP OF CURB BOX SHALL HAVE "DUMP NO WASTE DRAINS TO FRESH WATER" LOGO OR APPROVED EQUAL. LOGO TO BE CAST INTO CURB BOX WITH RAISED LETTERS.

STORM SEWER CATCH BASIN MANHOLE

LAST REVISION: OCT 1999

PLATE NO. 5002

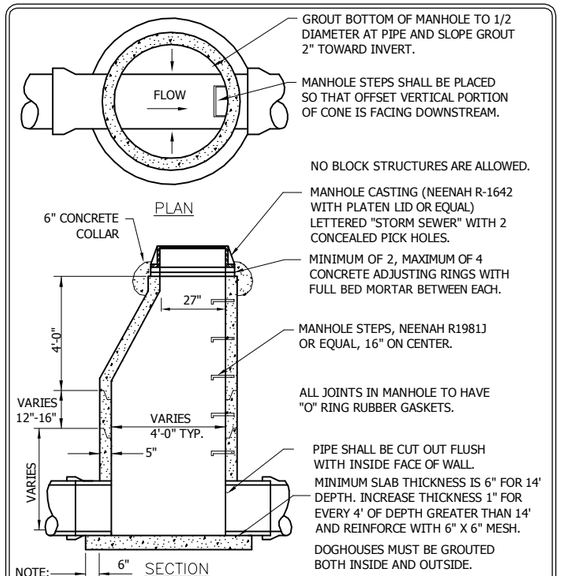


1. IRON MANHOLE ADJUSTING RINGS (NEENAH R-1979 OR APPROVED EQUAL) MAY BE USED WHEN RAISING CASTING RIM ELEVATION ABOVE THE STREET BASE COURSE. THE ADJUSTING RING SHOULD BE SEALED TO THE CASTING FRAME WITH EBS SUPER GLUE OR APPROVED EQUAL.

STORM SEWER MANHOLE

LAST REVISION: OCT 1999

PLATE NO. 5003

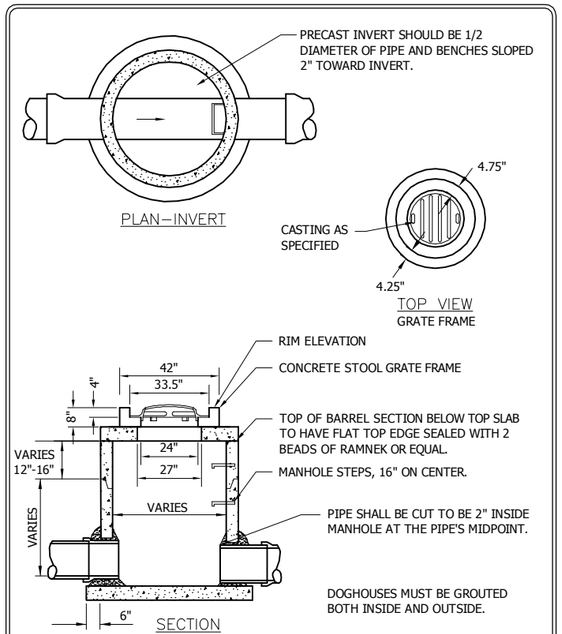


OFF STREET CATCHBASIN WITH CONCRETE STOOL GRATE FRAME

LAST REVISION: April 2009

PLATE NO. 5004

SEE CITY PLATE NO. 6002 FOR RIPRAP PLACEMENT.

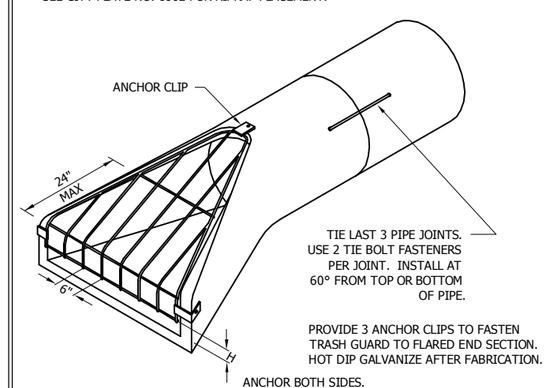


TRASH GUARD SIZING

| PIPE SIZE | BARS | 'H' | BOLTS |
|---|---|---|---|
| 12"-18" | 3/4"ϕ | 6" | 5/8" |
| 21"-42" | 1"ϕ | 6" | 3/4" |
| 48"-72" | 1 1/4"ϕ | 12" | 1" |

NOTES:
1. ALL REINFORCED CONCRETE APRONS SHALL BE FURNISHED AND INSTALLED WITH TRASH GUARDS.
2. ALL NEW REINFORCED CONCRETE APRONS ON NEW PIPE SHALL BE TIED BACK 3 PIPE LENGTHS BACK FROM APRON.
3. ALL NEW REINFORCED CONCRETE APRONS ON EXISTING PIPE SHALL BE TIED TO THE FIRST PIPE ADJACENT TO THE APRON.

FLARED END SECTION AND TRASH GUARD

LAST REVISION: OCT 1999

PLATE NO. 5005

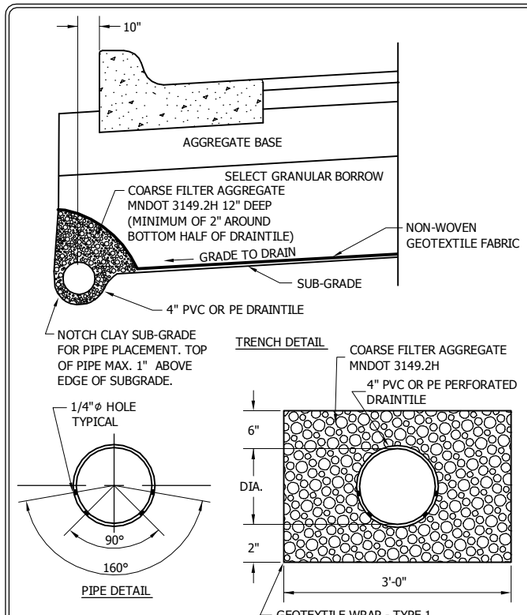


SUBSURFACE DRAINTILE FOR STREETS

LAST REVISION: MARCH 2008

PLATE NO. 5006

Stantec
2335 Highway 36 W
St. Paul, MN 55113
www.stantec.com

I HEREBY CERTIFY THAT THIS PLAN, SPECIFICATION OR REPORT WAS PREPARED BY ME OR UNDER MY DIRECT SUPERVISION AND THAT I AM A DULY LICENSED PROFESSIONAL ENGINEER UNDER THE LAWS OF THE STATE OF MINNESOTA.

PRINT NAME: KELLIE M. SCHIEGEL

SIGNATURE:

DATE: 02/20/2014

LIC. NO. 46900

# CITY OF MAPLE PLAIN, MINNESOTA

## MAIN ST W AND RAINBOW AVE UTILITY AND STREET IMPROVEMENTS

STANDARD DETAILS

| NO | REVISION | DATE |
|---|---|---|

| | |
|---|---|
| SURVEY | NHL |
| DRAWN | ACD |
| DESIGNED | KMS |
| CHECKED | KMS |
| APPROVED | DDB |
| PROJ. NO. | 193802390 |

SHEET NUMBER

C8.02

Plot Date: 02/20/2014 - 12:38pm
Drawing: P:\193802390\CAD\Dwg\193802390-C-ADI.Dwg
Xrefs: "2331141 BORDER" "193802390_BORDER"

THE CONTRACTOR SHALL VERIFY AND BE RESPONSIBLE FOR ALL DIMENSIONS. DO NOT SCALE THE DRAWING - ANY ERRORS OR OMISSIONS SHALL BE REPORTED TO STANTEC WITHOUT DELAY. THE COPYRIGHTS TO ALL DESIGNS AND DRAWINGS ARE THE PROPERTY OF STANTEC. REPRODUCTION OR USE FOR ANY PURPOSE OTHER THAN THAT AUTHORIZED BY STANTEC IS FORBIDDEN.

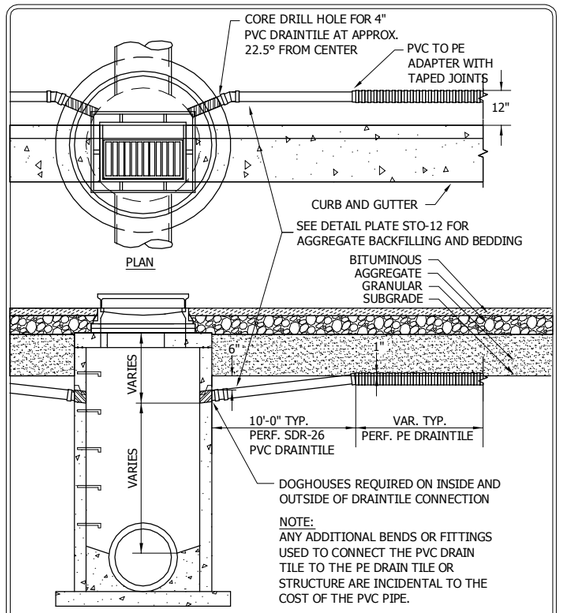


Stantec

DRAINTILE INSTALLATION INTO CATCHBASIN MANHOLE

LAST REVISION: MARCH 2008

PLATE NO. 5007

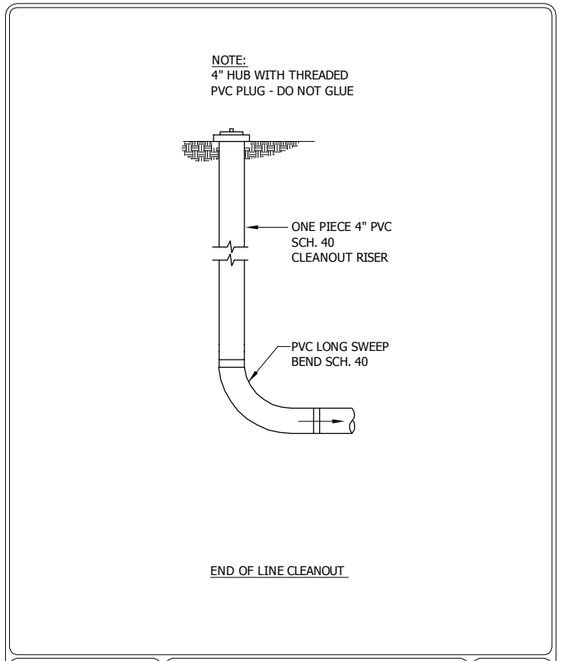


Stantec

PVC SERVICE LINE CLEANOUTS

LAST REVISION: April 2000

PLATE NO. 5008

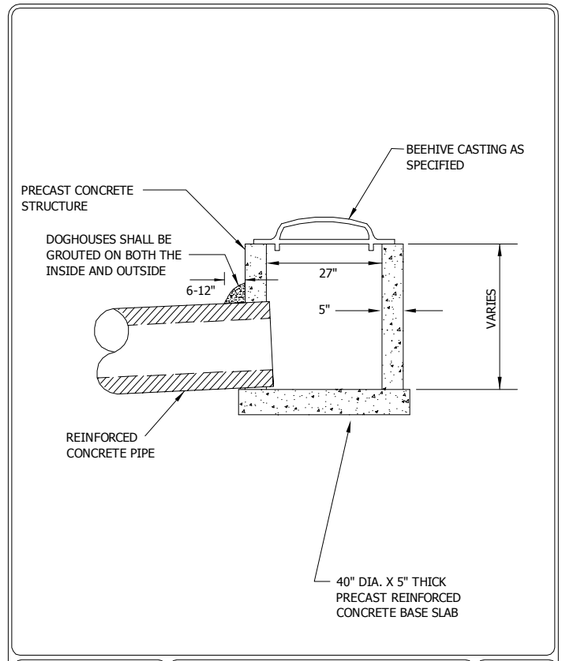


Stantec

PRECAST 27" SHALLOW DEPTH BEEHIVE

LAST REVISION: APRIL 2008

PLATE NO. 5009

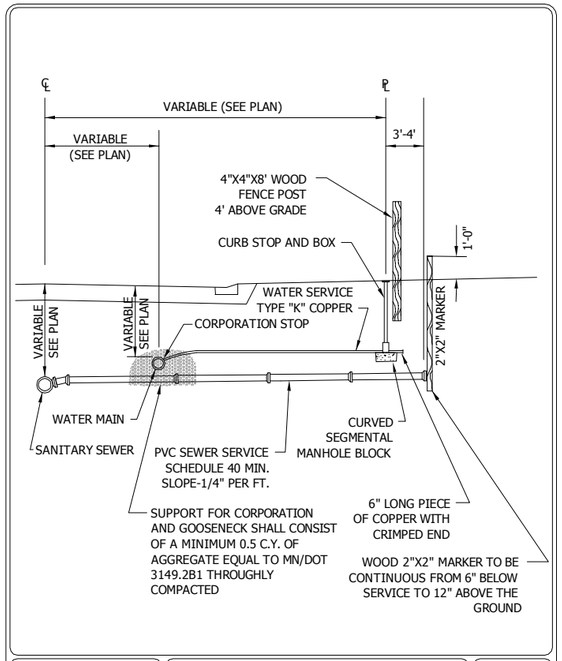


Stantec

SEWER AND WATER SERVICE CONNECTIONS

LAST REVISION: April 2000

PLATE NO. 6001

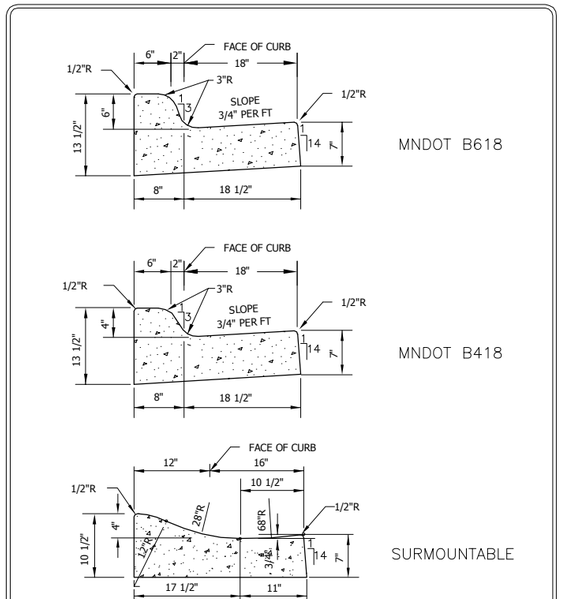


Stantec

TYPICAL CURB AND GUTTER

LAST REVISION: OCT 1999

PLATE NO. 7001

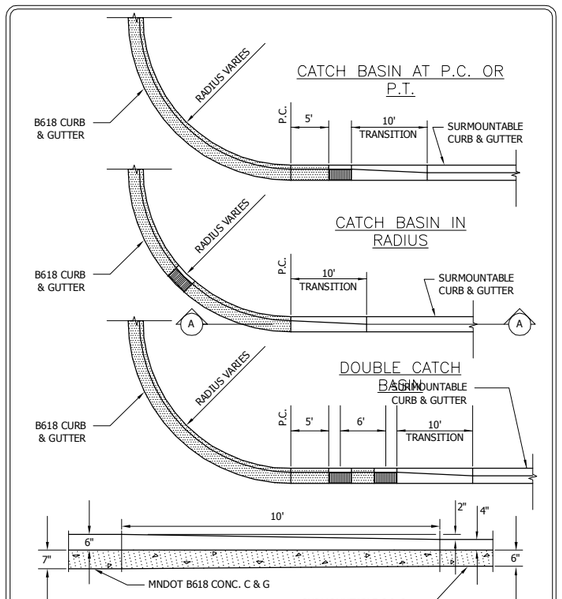


Stantec

CONCRETE CURB & GUTTER TRANSITION

LAST REVISION: April 2010

PLATE NO. 7002

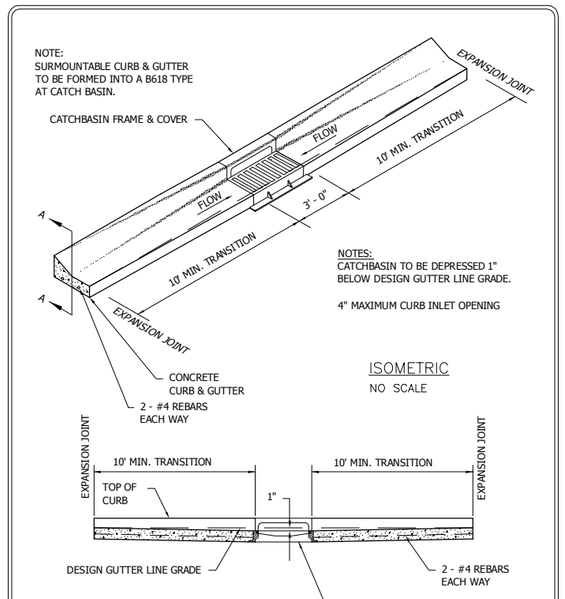


Stantec

SURMOUNTABLE CURB & GUTTER CONSTRUCTION AT CATCH BASIN

LAST REVISION: April 2010

PLATE NO. 7003

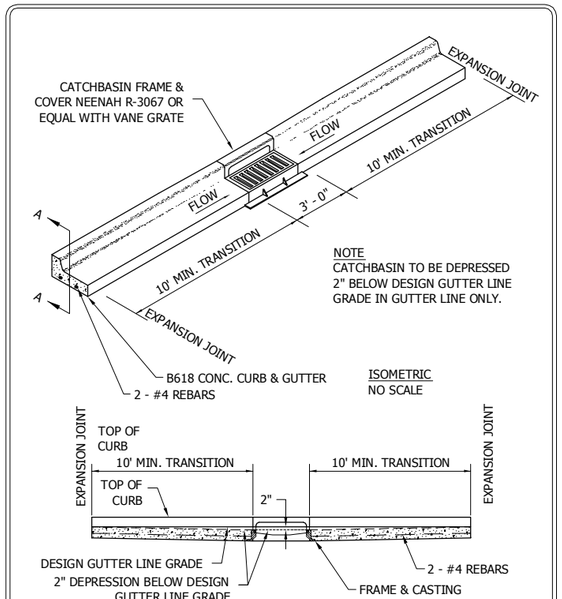


Stantec

B618 CURB & GUTTER CONSTRUCTION AT CATCHBASIN

LAST REVISION: MARCH 2008

PLATE NO. 7004

Stantec
2335 Highway 36 W
St. Paul, MN 55113
www.stantec.com

I HEREBY CERTIFY THAT THIS PLAN, SPECIFICATION OR REPORT WAS PREPARED BY ME OR UNDER MY DIRECT SUPERVISION AND THAT I AM A DULY LICENSED PROFESSIONAL ENGINEER UNDER THE LAWS OF THE STATE OF MINNESOTA.

PRINT NAME: KELLIE M. SCHIEGEL

SIGNATURE:

DATE: 02/20/2014 LIC. NO. 46900

# CITY OF MAPLE PLAIN, MINNESOTA

## MAIN ST W AND RAINBOW AVE UTILITY AND STREET IMPROVEMENTS

STANDARD DETAILS

| NO | REVISION | DATE |
|---|---|---|
| | | |

| | |
|---|---|
| SURVEY | NHL |
| DRAWN | ACD |
| DESIGNED | KMS |
| CHECKED | KMS |
| APPROVED | DDB |
| PROJ. NO. | 193802390 |

SHEET NUMBER

C8.03



Plot Date: 02/20/2014 - 12:57pm
Drawing: P:\193802390\CAD\Dwg\193802390_C-AD_Dwg\193802390_C801.dwg
Xrefs: "2331141 BORDER" 193802390_BORDER

THE CONTRACTOR SHALL VERIFY AND BE RESPONSIBLE FOR ALL DIMENSIONS. DO NOT SCALE THE DRAWING - ANY ERRORS OR OMISSIONS SHALL BE REPORTED TO STANTEC WITHOUT DELAY. THE COPYRIGHTS TO ALL DESIGNS AND DRAWINGS ARE THE PROPERTY OF STANTEC. REPRODUCTION OR USE FOR ANY PURPOSE OTHER THAN THAT AUTHORIZED BY STANTEC IS FORBIDDEN.

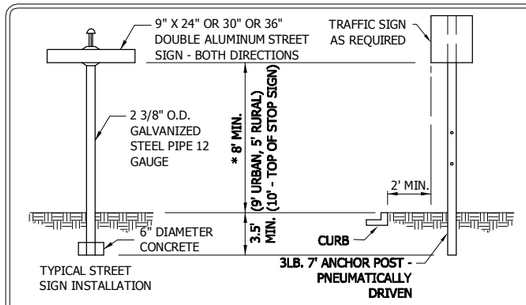


TYPICAL STREET SIGN INSTALLATION

STREET SIGN NOTES:
1. FIRST LETTER SHALL BE UPPER CASE - 6 INCH. 8 INCH SHALL BE USED ON MULTI-LANE ROADS WITH SPEED LIMIT GREATER THAN 40 MPH.
2. OTHER LETTERS SHALL BE LOWER CASE - 4.5 INCH. 6 INCH SHALL BE USED ON MULTI-LANE ROADS WITH SPEED LIMIT GREATER THAN 40 MPH.
3. LETTERING TO BE WHITE ON GREEN BACKGROUND.
4. FOR PRIVATE STREETS, LETTERING TO BE WHITE ON BLUE BACKGROUND.

TRAFFIC SIGN NOTES:
1. TRAFFIC SIGNS WITH 9 SQ. FT. OR MORE OF SURFACE AREA AND 36" OR LARGER IN SIZE, MUST BE MOUNTED WITH TWO SEPARATE POSTS.
*2. COMBINATION STOP SIGN AND STREET SIGN POLES TO HAVE STOP SIGN PLACED 10' FROM GROUND TO TOP AND THE STREET SIGN ABOVE TOP.

Stantec | STREET AND TRAFFIC SIGN INSTALLATION | LAST REVISION: MAY 2011 | PLATE NO. 7005

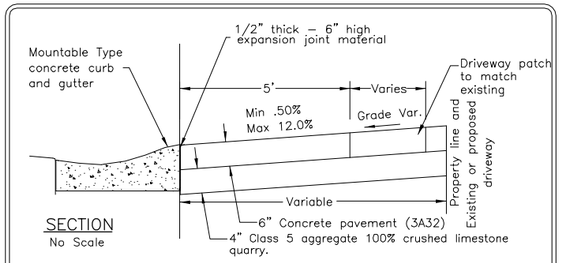


SECTION
No Scale

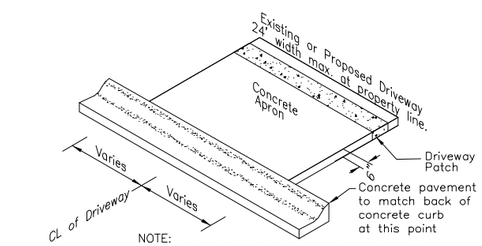


ISOMETRIC
No Scale

NOTE:
1. Control joints in concrete curb not to exceed 10' spacing through driveway section.
2. Driveway wings are not required with the mountable style curbing. The maximum driveway width at the curb and the property line is 24'. The minimum driveway width is 12'.

Stantec | CONCRETE DRIVEWAY APRON FOR SURMOUNTABLE CURB | LAST REVISION: JAN 2005 | PLATE NO. 7006

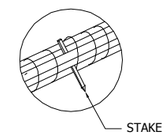


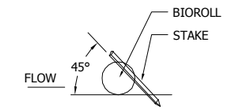


2" x 2" x 16" LONG WOODEN STAKES AT 1'-0" SPACING . STAKES SHALL BE DRIVEN THROUGH THE BACK HALF OF THE FILTER LOG AT AN ANGLE OF 45° WITH THE TOP OF THE STAKE POINTING UPSTREAM.

NOTE:
POINT 1 MUST BE A MINIMUM OF 6" HIGHER THAN POINT 2 TO ENSURE THAT WATER FLOWS OVER THE DIKE AND NOT AROUND THE ENDS.

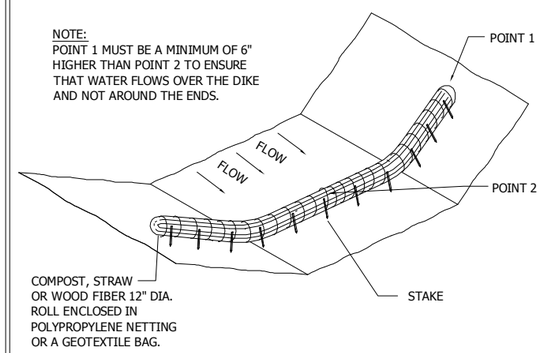


Stantec | FILTER LOG DITCH CHECK | LAST REVISION: April 2008 | PLATE NO. 8001

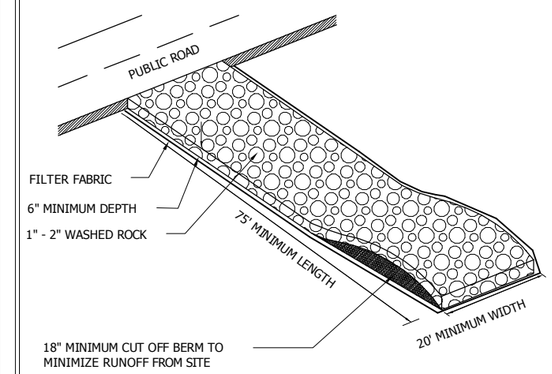


NOTE: FILTER FABRIC SHALL BE PLACED UNDER ROCK TO STOP MUD MIGRATION THROUGH ROCK.

Stantec | ROCK CONSTRUCTION ENTRANCE | LAST REVISION: OCT 1999 | PLATE NO. 8002

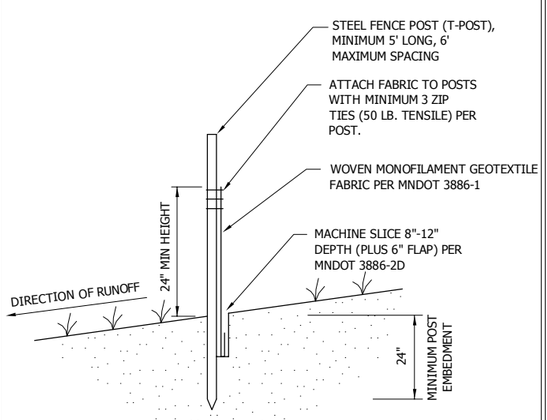


Stantec | SILT FENCE MACHINE SLICED | LAST REVISION: FEB 2003 | PLATE NO. 8003

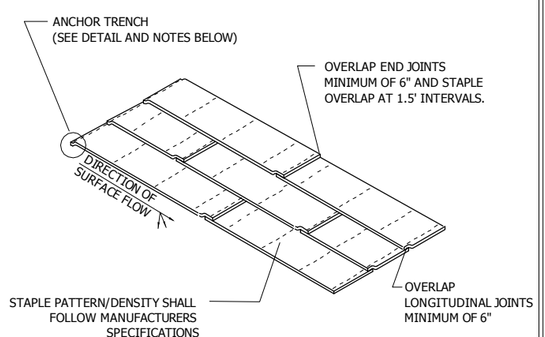


ANCHOR TRENCH
1. DIG 6" X 6" TRENCH
2. LAY BLANKET IN TRENCH
3. STAPLE AT 1.5' INTERVALS
4. BACKFILL WITH NATURAL SOIL AND COMPACT
5. BLANKET LENGTH SHALL NOT EXCEED 100' WITHOUT AN ANCHOR TRENCH

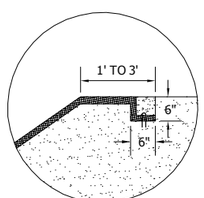


NOTE:
SLOPE SURFACE SHALL BE FREE OF ROCKS, SOIL CLUMPS, STICKS, VEHICLE IMPRINTS, AND GRASS. BLANKETS SHALL HAVE GOOD SOIL CONTACT.

Stantec | EROSION CONTROL BLANKET INSTALLATION | LAST REVISION: APRIL 2008 | PLATE NO. 8004

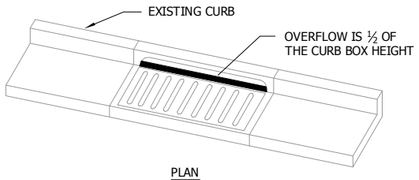


PLAN

WIMCO ROAD DRAIN CG-23* HIGH FLOW INLET PROTECTION CURB AND GUTTER MODEL OR CITY APPROVED EQUAL.

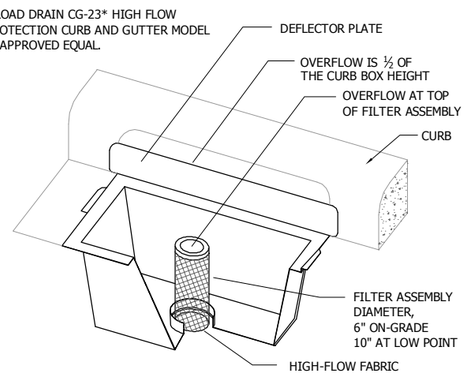


* FOR THE NEW R-3290-VB STANDARD CASTING, INSTALL WIMCO ROAD DRAIN CG-3290 OR CITY APPROVED EQUAL.

Stantec | INLET PROTECTION – CATCH BASIN INSERT AFTER CURB CONSTRUCTION | LAST REVISION: APRIL 2008 | PLATE NO. 8005

Stantec
2335 Highway 36 W
St. Paul, MN 55113
www.stantec.com

I HEREBY CERTIFY THAT THIS PLAN, SPECIFICATION OR REPORT WAS PREPARED BY ME OR UNDER MY DIRECT SUPERVISION AND THAT I AM A DULY LICENSED PROFESSIONAL ENGINEER UNDER THE LAWS OF THE STATE OF MINNESOTA.

PRINT NAME: KELLIE M. SCHIEGEL
SIGNATURE:
DATE: 02/20/2014 LIC. NO. 46900

# CITY OF MAPLE PLAIN, MINNESOTA
## MAIN ST W AND RAINBOW AVE UTILITY AND STREET IMPROVEMENTS
STANDARD DETAILS

| NO | REVISION | DATE |
|---|---|---|
| | | |

| | |
|---|---|
| SURVEY | NHL |
| DRAWN | ACD |
| DESIGNED | KMS |
| CHECKED | KMS |
| APPROVED | DDB |
| PROJ. NO. | 193802390 |

SHEET NUMBER
C8.04



Plot Date: 02/20/2014 - 12:56pm
Drawing: J:\193802390\CADD\Dwg\193802390_C-ADD.Dwg\193802390_C801.dwg
Xrefs: 2331141 BORDER 193802390 BORDER

THE CONTRACTOR SHALL VERIFY AND BE RESPONSIBLE FOR ALL DIMENSIONS. DO NOT SCALE THE DRAWING - ANY ERRORS OR OMISSIONS SHALL BE REPORTED TO STANTEC WITHOUT DELAY. THE COPYRIGHTS TO ALL DESIGNS AND DRAWINGS ARE THE PROPERTY OF STANTEC. REPRODUCTION OR USE FOR ANY PURPOSE OTHER THAN THAT AUTHORIZED BY STANTEC IS FORBIDDEN.

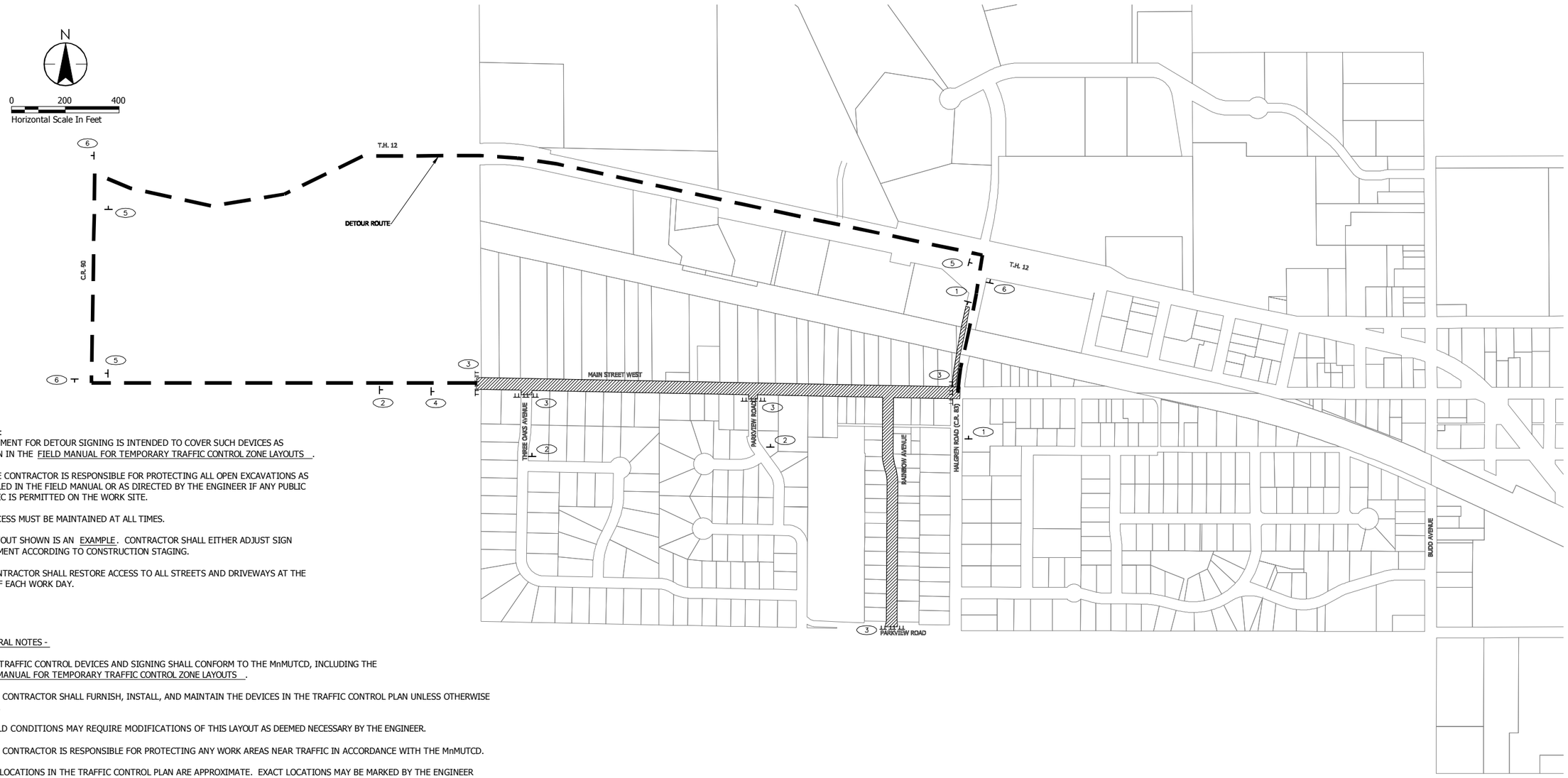


NOTES:
1. PAYMENT FOR DETOUR SIGNING IS INTENDED TO COVER SUCH DEVICES AS SHOWN IN THE FIELD MANUAL FOR TEMPORARY TRAFFIC CONTROL ZONE LAYOUTS .

2. THE CONTRACTOR IS RESPONSIBLE FOR PROTECTING ALL OPEN EXCAVATIONS AS DETAILED IN THE FIELD MANUAL OR AS DIRECTED BY THE ENGINEER IF ANY PUBLIC TRAFFIC IS PERMITTED ON THE WORK SITE.

3. ACCESS MUST BE MAINTAINED AT ALL TIMES.

4. LAYOUT SHOWN IS AN EXAMPLE. CONTRACTOR SHALL EITHER ADJUST SIGN PLACEMENT ACCORDING TO CONSTRUCTION STAGING.

5. CONTRACTOR SHALL RESTORE ACCESS TO ALL STREETS AND DRIVEWAYS AT THE END OF EACH WORK DAY.

- GENERAL NOTES -

1. ALL TRAFFIC CONTROL DEVICES AND SIGNING SHALL CONFORM TO THE MnMUTCD, INCLUDING THE FIELD MANUAL FOR TEMPORARY TRAFFIC CONTROL ZONE LAYOUTS .

2. THE CONTRACTOR SHALL FURNISH, INSTALL, AND MAINTAIN THE DEVICES IN THE TRAFFIC CONTROL PLAN UNLESS OTHERWISE NOTED.

3. FIELD CONDITIONS MAY REQUIRE MODIFICATIONS OF THIS LAYOUT AS DEEMED NECESSARY BY THE ENGINEER.

4. THE CONTRACTOR IS RESPONSIBLE FOR PROTECTING ANY WORK AREAS NEAR TRAFFIC IN ACCORDANCE WITH THE MnMUTCD.

5. ALL LOCATIONS IN THE TRAFFIC CONTROL PLAN ARE APPROXIMATE. EXACT LOCATIONS MAY BE MARKED BY THE ENGINEER PRIOR TO PLACEMENT BY THE CONTRACTOR.

6. INSTALLATION DETAILS OF SIGNS ON BARRICADES SHALL BE APPROVED BY THE ENGINEER PRIOR TO PLACEMENT.

7. SIGNS SHALL BE MOUNTED ON POSTS DRIVEN INTO THE GROUND AT PROPER HEIGHT AND LATERAL OFFSET AS DETAILED IN THE MnMUTCD. SIGNS MAY ALSO BE MOUNTED ON PORTABLE SUPPORTS 5-7 FT. HIGH, AS APPROVED BY THE ENGINEER. WHEN SIGNS ARE REMOVED, THE SIGN POSTS SHALL BE REMOVED AS SOON AS POSSIBLE. ALL SIGNS MOUNTED MORE THAN 14 DAYS SHALL BE POST MOUNTED.

8. ALL TRAFFIC CONTROL DEVICES, INCLUDING OVERHEAD SIGNS ON ROADS OPEN TO TRAFFIC THAT ARE NOT CONSISTENT WITH TRAFFIC OPERATIONS SHALL BE COVERED, REMOVED, OR REVISED AS DIRECTED BY THE ENGINEER.

9. ALL WARNING SIGNS SHALL BE MADE OF DIAMOND GRADE ORANGE REFLECTIVE SHEETING (3984 SERIES) OR AN APPROVED SUBSTITUTE. ALL M4-10 (DETOUR ARROW) AND ALL M4-8 (DETOUR) SIGNS SHALL BE FLOURECENT DIAMOND GRADE (3924 SERIES) SHEETING. ALL REGULATORY SIGNS SHALL BE V.I.P. DIAMOND GRADE (3990 SERIES) SHEETING. ALL ROUTE MARKER GUIDE SIGNS AND DIRECTIONAL ARROW SIGNS SHALL HAVE RETROREFLECTIVE SHEETING.

10. BARRICADES SHALL BE TYPE III AND SHALL BE CONSTRUCTED OF LIGHT MATERIAL. THE ACTUAL NUMBER OF BARRICADES AT EACH LOCATION REQUIRED MAY VARY DEPENDING ON THE SIZE OF THE BARRICADE USED.

11. THE CONTRACTOR SHALL COORDINATE THE REMOVAL OF THE TEMPORARY SIGNS.

12. ALL SIGNS PROVIDED BY THE CONTRACTOR FOR TRAFFIC CONTROL DURING CONSTRUCTION SHALL REMAIN THE PROPERTY OF THE CONTRACTOR AND SHALL BE REMOVED FROM THE JOB SITE WHEN THEY ARE NO LONGER NEEDED.

13. ALL SIGN POSTS SHALL BE REMOVED AND THE SURROUNDING GROUND RETURNED TO ITS ORIGINAL CONDITION WHEN THEY ARE NO LONGER NEEDED.

14. THE CONTRACTOR MUST GIVE 48 HOURS NOTICE PRIOR TO ANY TRAFFIC CONTROL SIGNS BEING PLACED.

1 W20-1 (48x48)

2 W20-3 (48x48)

3 R11-4 (60x30)

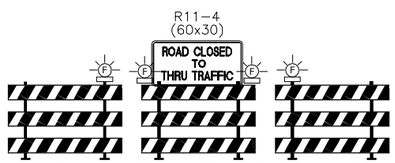


TYPE III BARRICADES SHALL SPAN ROADWAY. NUMBER OF BARRICADES NECESSARY MAY VARY.

4 G20-X1 (54x48)

G20-X1 SIGNS SHALL BE INSTALLED 10 DAYS PRIOR TO ROAD CLOSURE.

5 M4-9ATR (30x24)

6 M4-9ATL (30x24)

LEGEND

TEMPORARY SIGN

TYPE A FLASHING WARNING LIGHT(S)

TYPE III BARRICADE

WORK AREA -

Stantec
2335 Highway 36 W
St. Paul, MN 55113
www.stantec.com

I HEREBY CERTIFY THAT THIS PLAN, SPECIFICATION OR REPORT WAS PREPARED BY ME OR UNDER MY DIRECT SUPERVISION AND THAT I AM A DULY LICENSED PROFESSIONAL ENGINEER UNDER THE LAWS OF THE STATE OF MINNESOTA.

PRINT NAME: KIRK M. SCHIEGEL

SIGNATURE: _____ LIC. NO. 46600

DATE: 02/20/2014

# CITY OF MAPLE PLAIN, MINNESOTA

## MAIN ST W AND RAINBOW AVE UTILITY AND STREET IMPROVEMENTS

TRAFFIC CONTROL PLAN

| NO | REVISION | DATE |
|---|---|---|
| | | |

| | |
|---|---|
| SURVEY | NHL |
| DRAWN | ACD |
| DESIGNED | KMS |
| CHECKED | KMS |
| APPROVED | DDB |
| PROJ. NO. | 193802390 |

SHEET NUMBER
C9.01

Plot Date: 02/20/2014 2:46pm
Drawing: J:\193802390\Civil\Drawings\193802390\C-A20_Dwg\193802390_C900.dwg
Xrefs: 193802390-MAP-Adjusted, 193802390, BORDER, 193802390_JOINO

THE CONTRACTOR SHALL VERIFY AND BE RESPONSIBLE FOR ALL DIMENSIONS. DO NOT SCALE THE DRAWING - ANY ERRORS OR OMISSIONS SHALL BE REPORTED TO STANTEC WITHOUT DELAY. THE COPYRIGHTS TO ALL DESIGNS AND DRAWINGS ARE THE PROPERTY OF STANTEC. REPRODUCTION OR USE FOR ANY PURPOSE OTHER THAN THAT AUTHORIZED BY STANTEC IS FORBIDDEN.

MAPLE PLAIN
EST.1868 INC.1912

# MAIN STREET WEST AND RAINBOW AVENUE UTILITY AND STREET IMPROVEMENTS

# MAPLE PLAIN, MN

VICINITY MAP

0 300 600
Horizontal scale in feet

| SHEET NUMBER | SHEET TITLE |
|---|---|
| GENERAL | |
| G0.01 | TITLE SHEET |
| G0.02 | LEGEND |
| G0.03 | NOTES AND STORM SEWER SCHEDULE |
| CIVIL | |
| C0.01 | LOCATION PLAN |
| C0.02-C0.03 | DEMOLITION PLAN |
| C1.01 | TYPICAL SECTIONS |
| C2.01-C2.02 | TEMPORARY EROSION CONTROL PLAN |
| C2.03-C2.04 | PERMANENT EROSION CONTROL PLAN |
| C3.01 | GRADING PLAN - RAVINE |
| C3.02 | GRADING PLAN - RAINBOW PARK |
| C4.01-C4.04 | SANITARY AND WATER MAIN PLAN AND PROFILE |
| C5.01-C5.07 | STORM SEWER PLAN AND PROFILE |
| C5.08 | RAIN GARDEN DETAILS |
| C6.01-C6.04 | STREET PLAN AND PROFILE |
| C6.05 | INTERSECTION DETAILS |
| C7.01-C7.17 | CROSS SECTIONS |
| C7.18 | EARTHWORK SUMMARY |
| C8.01-C8.04 | STANDARD DETAILS |
| C9.01 | TRAFFIC CONTROL PLAN |
| C9.02-C9.03 | SIGNAGE AND STRIPING PLAN |

THIS PLAN SET CONTAINS 55 SHEETS.

| | |
|---|---|
| ROGER HACKBARTH | MAYOR |
| MICHAEL DELUCA | COUNCILMEMBER |
| DAVE EISINGER | COUNCILMEMBER |
| JUSTIN MCCOY | COUNCILMEMBER |
| JERRY YOUNG | COUNCILMEMBER |
| TESSIA MELVIN | CITY ADMINISTRATOR |
| JEFF CARSON | CITY ATTORNEY |

Stantec

I HEREBY CERTIFY THAT THIS PLAN, SPECIFICATION, OR REPORT WAS PREPARED BY ME OR UNDER MY DIRECT SUPERVISION AND THAT I AM A DULY LICENSED PROFESSIONAL ENGINEER UNDER THE LAWS OF THE STATE OF MINNESOTA.

PRINT NAME: KELLIE M. SCHIEGEL

SIGNATURE:
DATE: 02/20/2014 LIC. NO. 46900

CITY OF MAPLE PLAIN, MINNESOTA
MAIN ST W AND RAINBOW AVE UTILITY AND STREET IMPROVEMENTS
TITLE SHEET

| NO | REVISION | DATE |
|---|---|---|
| | | |

| | |
|---|---|
| SURVEY | NHL |
| DRAWN | ACD |
| DESIGNED | KMS |
| CHECKED | KMS |
| APPROVED | DDB |
| PROJ. NO. | 193802390 |

SHEET NUMBER
G0.01

THE CONTRACTOR SHALL VERIFY AND BE RESPONSIBLE FOR ALL DIMENSIONS. DO NOT SCALE THE DRAWING - ANY ERRORS OR OMISSIONS SHALL BE REPORTED TO STANTEC WITHOUT DELAY. THE COPYRIGHTS TO ALL DESIGNS AND DRAWINGS ARE THE PROPERTY OF STANTEC. REPRODUCTION OR USE FOR ANY PURPOSE OTHER THAN THAT AUTHORIZED BY STANTEC IS FORBIDDEN.

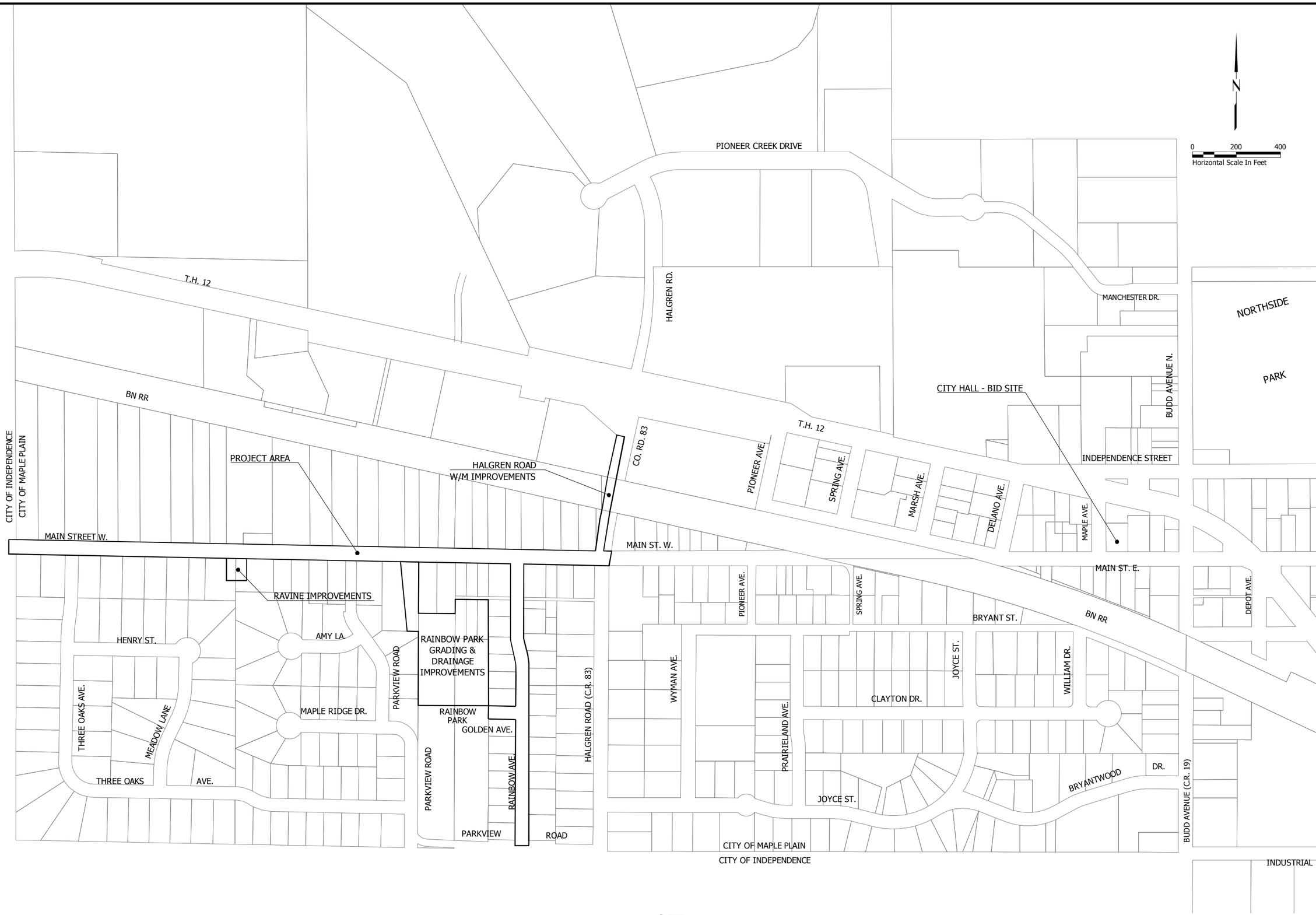


Stantec
2335 Highway 36 W
St. Paul, MN 55113
www.stantec.com

I HEREBY CERTIFY THAT THIS PLAN, SPECIFICATION, OR REPORT WAS PREPARED BY ME OR UNDER MY DIRECT SUPERVISION AND THAT I AM A DULY LICENSED PROFESSIONAL ENGINEER UNDER THE LAWS OF THE STATE OF MINNESOTA.

PRINT NAME: KELLIE M. SCHIEGEL

SIGNATURE: _____

DATE: 02/20/2014 LIC. NO. 46900

# CITY OF MAPLE PLAIN, MINNESOTA

## MAIN ST W AND RAINBOW AVE UTILITY AND STREET IMPROVEMENTS

LOCATION PLAN

| NO | REVISION | DATE |
|---|---|---|
| | | |

| | |
|---|---|
| SURVEY | NHL |
| DRAWN | ACD |
| DESIGNED | KMS |
| CHECKED | KMS |
| APPROVED | DDB |
| PROJ. NO. | 193802390 |

SHEET NUMBER
C0.01

Plot Date: 02/20/2014 - 10:39am
Drawing: J:\193802390\CAD\Dwg\1193802390\C-CAD-Dwg\193802390_C001.dwg
Xrefs: 193802384_MAP 193802390_BORDER 193802390 CD01 2335REENNAMS

THE CONTRACTOR SHALL VERIFY AND BE RESPONSIBLE FOR ALL DIMENSIONS. DO NOT SCALE THE DRAWING. ALL DESIGNS, DRAWINGS AND SPECIFICATIONS ARE THE PROPERTY OF STANTEC. THE COPYRIGHTS TO ALL DESIGNS AND DRAWINGS ARE THE PROPERTY OF STANTEC. REPRODUCTION OR USE FOR ANY PURPOSE OTHER THAN THAT AUTHORIZED BY STANTEC IS FORBIDDEN.

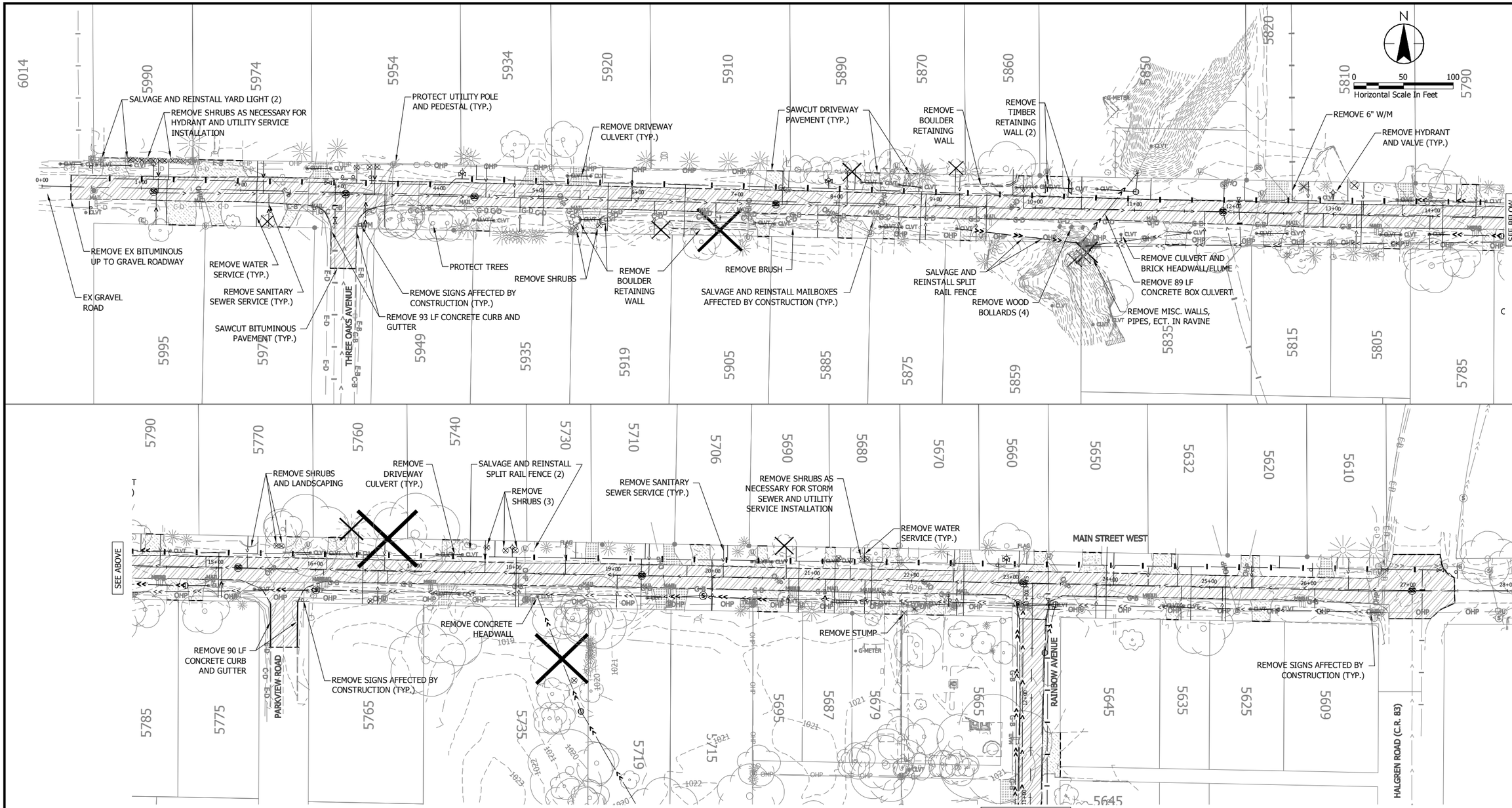





NOTES:
1. SALVAGE MAILBOXES PRIOR TO CONSTRUCTION AND DELIVER TO PROPERTY OWNER.
2. BITUMINOUS CURB REMOVAL INCIDENTAL TO BITUMINOUS PAVEMENT REMOVAL.
3. FINAL DRIVEWAY REMOVAL LIMITS TO BE DETERMINED IN THE FIELD BY THE ENGINEER.
4. FINAL TREE AND SHRUB REMOVALS WILL BE DETERMINED IN THE FIELD BY THE ENGINEER AND MAY VARY FROM WHAT IS SHOWN IN THE PLANS.
5. IN GENERAL, EXISTING WATERMAIN PIPE NOT CONFLICTING WITH NEW UTILITIES WILL BE ABANDONED PER SPECIFICATIONS. ALL OTHER EXISTING WATERMAIN WILL BE REMOVED.
6. GAS SERVICE LOCATIONS ARE NOT SHOWN ON THESE PLANS. THE CONTRACTOR SHOULD ASSUME AT LEAST ONE SERVICE TO EVERY LOT.

REMOVE/ABANDON WATERMAIN PIPE
REMOVE SANITARY PIPE
REMOVE SANITARY MANHOLE
REMOVE STORM PIPE
REMOVE STORM STRUCTURE
SAWCUT PAVEMENT
REMOVE BITUMINOUS PAVEMENT AND BITUMINOUS CURB
REMOVE/PATCH BITUMINOUS DRIVEWAY
REMOVE/PATCH CONCRETE DRIVEWAY
REMOVE/PATCH GRAVEL DRIVEWAY
REMOVE TREE
REMOVE BUSH

Stantec
2335 Highway 36 W
St. Paul, MN 55113
www.stantec.com

I HEREBY CERTIFY THAT THIS PLAN, SPECIFICATION OR REPORT WAS PREPARED BY ME OR UNDER MY DIRECT SUPERVISION AND THAT I AM A DULY LICENSED PROFESSIONAL ENGINEER UNDER THE LAWS OF THE STATE OF MINNESOTA.

PRINT NAME: KELLIE M. SCHIEGEL

SIGNATURE:
DATE: 02/20/2014 LIC. NO. 46000

# CITY OF MAPLE PLAIN, MINNESOTA

## MAIN ST W AND RAINBOW AVE UTILITY AND STREET IMPROVEMENTS

MAIN STREET WEST
DEMOLITION PLAN

| NO | REVISION | DATE |
|---|---|---|
| | | |

| | |
|---|---|
| SURVEY | NHL |
| DRAWN | ACD |
| DESIGNED | KMS |
| CHECKED | KMS |
| APPROVED | DDB |
| PROJ. NO. | 193802390 |

SHEET NUMBER
C0.02

Plot Date: 02/20/2014 - 11:06am
Drawing: J:\193802390\CAD\Dwg\193802390\C-ADI\Dwg\193802390_C002.dwg
Xrefs: 193802390-XAP-Adjusted, 193802390_BORDER, 193802390_XSR

THE CONTRACTOR SHALL VERIFY AND BE RESPONSIBLE FOR ALL DIMENSIONS. DO NOT SCALE THE DRAWING - ANY ERRORS OR OMISSIONS SHALL BE REPORTED TO STANTEC WITHOUT DELAY. THE COPYRIGHTS TO ALL DESIGNS AND DRAWINGS ARE THE PROPERTY OF STANTEC. REPRODUCTION OR USE FOR ANY PURPOSE OTHER THAN THAT AUTHORIZED BY STANTEC IS FORBIDDEN.

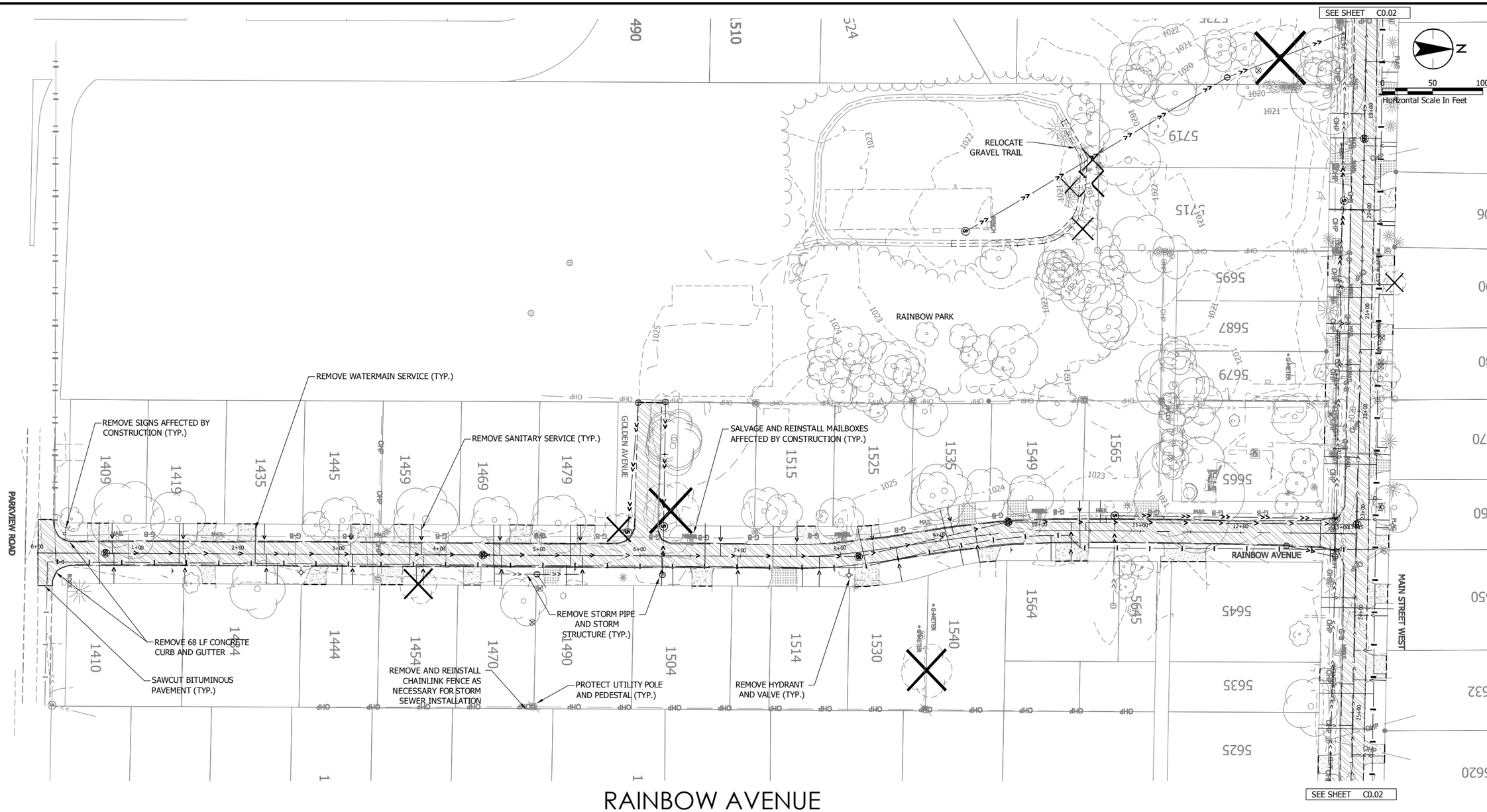


NOTES:

1. SALVAGE MAILBOXES PRIOR TO CONSTRUCTION AND DELIVER TO PROPERTY OWNER.
2. BITUMINOUS CURB REMOVAL INCIDENTAL TO BITUMINOUS PAVEMENT REMOVAL.
3. FINAL DRIVEWAY REMOVAL LIMITS TO BE DETERMINED IN THE FIELD BY THE ENGINEER.
4. FINAL TREE AND SHRUB REMOVALS WILL BE DETERMINED IN THE FIELD BY THE ENGINEER AND MAY VARY FROM WHAT IS SHOWN IN THE PLANS.
5. IN GENERAL, EXISTING WATERMAIN PIPE NOT CONFLICTING WITH NEW UTILITIES WILL BE ABANDONED PER SPECIFICATIONS. ALL OTHER EXISTING WATERMAIN WILL BE REMOVED.
6. GAS SERVICE LOCATIONS ARE NOT SHOWN ON THESE PLANS. THE CONTRACTOR SHOULD ASSUME AT LEAST ONE SERVICE TO EVERY LOT.

REMOVE/ABANDON WATERMAIN PIPE
REMOVE SANITARY PIPE
REMOVE SANITARY MANHOLE
REMOVE STORM PIPE
REMOVE STORM STRUCTURE
SAWCUT PAVEMENT
REMOVE BITUMINOUS PAVEMENT AND BITUMINOUS CURB
REMOVE/PATCH BITUMINOUS DRIVEWAY
REMOVE/PATCH CONCRETE DRIVEWAY
REMOVE/PATCH GRAVEL DRIVEWAY
REMOVE TREE
REMOVE BUSH

Stantec
2335 Highway 36 W
St. Paul, MN 55113
www.stantec.com

I HEREBY CERTIFY THAT THIS PLAN, SPECIFICATION OR REPORT WAS PREPARED BY ME OR UNDER MY DIRECT SUPERVISION AND THAT I AM A DULY LICENSED PROFESSIONAL ENGINEER UNDER THE LAWS OF THE STATE OF MINNESOTA.

PRINT NAME: KELLIE M. SCHIEGEL
SIGNATURE:
DATE: 02/20/2014
LIC. NO. 46900

# CITY OF MAPLE PLAIN, MINNESOTA

## MAIN ST W AND RAINBOW AVE UTILITY AND STREET IMPROVEMENTS

RAINBOW AVENUE AND RAINBOW PARK
DEMOLITION PLAN

| NO | REVISION | DATE |
|---|---|---|
| | | |

| | |
|---|---|
| SURVEY | NHL |
| DRAWN | ACD |
| DESIGNED | KMS |
| CHECKED | KMS |
| APPROVED | DDB |
| PROJ. NO. | 193802390 |

SHEET NUMBER
C0.03

Plot Date: 02/20/2014 - 11:08am
Drawing: J:\193802390\1-Working\Civil\193802390\CADD\Dwg\193802390_C002.dwg
Xrefs: 193802390-XAP-Adjusted, 193802390_BORDER, 193802390_XSM

THE CONTRACTOR SHALL VERIFY AND BE RESPONSIBLE FOR ALL DIMENSIONS. DO NOT SCALE THE DRAWING. ANY ERRORS OR OMISSIONS SHALL BE REPORTED TO STANTEC WITHOUT DELAY. THE COPYRIGHTS TO ALL DESIGNS AND DRAWINGS ARE THE PROPERTY OF STANTEC. REPRODUCTION OR USE FOR ANY PURPOSE OTHER THAN THAT AUTHORIZED BY STANTEC IS FORBIDDEN.

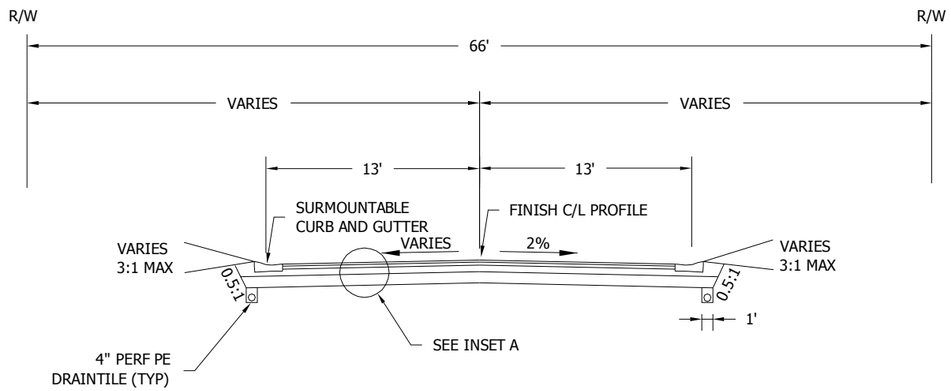


MAIN STREET WEST
0+50 - 26+00

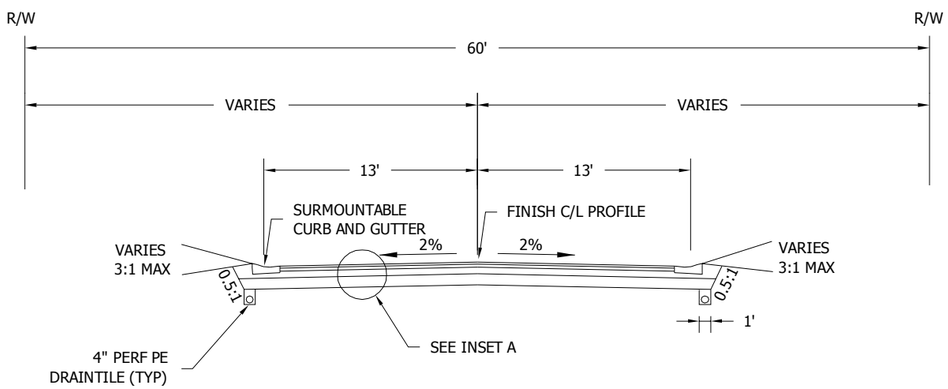


RAINBOW AVENUE
0+00 - 13+00

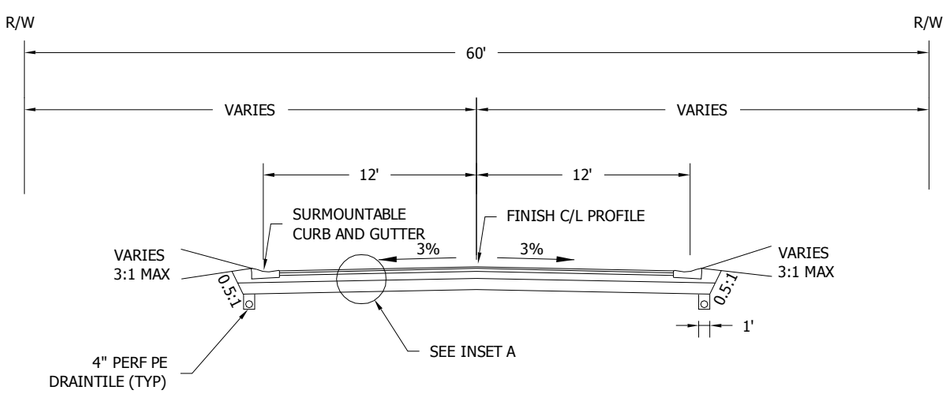


GOLDEN AVENUE
0+56 - 1+82

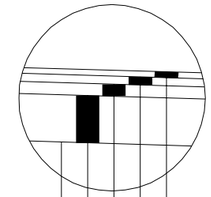

1.5" TYPE SP 12.5 WEARING COURSE MIXTURE (2,B) (SPWEB240B)
2.0" TYPE SP 12.5 NON-WEARING COURSE MIXTURE (2,B) (SPNWEB230B)
8" AGGREGATE BASE CLASS 5, 100% CRUSHED
12" SELECT GRANULAR BORROW
GEOTEXTILE FABRIC, TYPE 5

INSET A

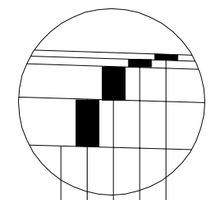

MATCH EXISTING - TYPE SP 12.5 WEARING COURSE MIXTURE (2,B) (SPWEB240B)
MATCH EXISTING - TYPE SP 12.5 NON-WEARING COURSE MIXTURE (2,B) (SPNWEB230B)
MATCH EXISTING - AGGREGATE BASE CLASS 5, 100% CRUSHED
MATCH EXISTING - SELECT GRANULAR BORROW
GEOTEXTILE FABRIC, TYPE 5

HALGREN ROAD BITUMINOUS SECTION

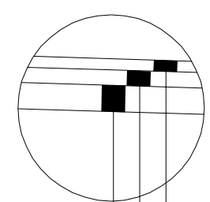

3" TYPE SP 9.5 WEARING COURSE MIXTURE (2,B) (SPWEA240B)
AGGREGATE BASE CLASS 5, 100% CRUSHED (DEPTH VARIES)
EXISTING AGGREGATE BASE (DEPTH VARIES)

ALT. NO. 1: BITUMINOUS PARKING LOT

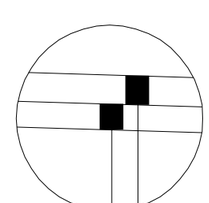

6" CONCRETE
4" AGGREGATE BASE CLASS 5, 100% CRUSHED

CONCRETE DRIVEWAY - RESIDENTIAL

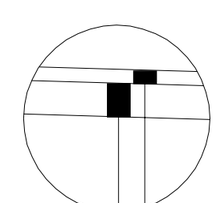

3" TYPE SP 9.5 WEARING COURSE MIXTURE (2,B) (SPWEA240B)
6" AGGREGATE BASE CLASS 5, 100% CRUSHED

BITUMINOUS DRIVEWAY - RESIDENTIAL

Stantec
2335 Highway 36 W
St. Paul, MN 55113
www.stantec.com

I HEREBY CERTIFY THAT THIS PLAN, SPECIFICATION OR REPORT WAS PREPARED BY ME OR UNDER MY DIRECT SUPERVISION AND THAT I AM A DULY LICENSED PROFESSIONAL ENGINEER UNDER THE LAWS OF THE STATE OF MINNESOTA.

PRINT NAME: KELLIE M. SCHIEGEL

SIGNATURE:
DATE: 02/20/2014 LIC. NO. 46900

CITY OF MAPLE PLAIN, MINNESOTA
MAIN ST W AND RAINBOW AVE UTILITY AND STREET IMPROVEMENTS
TYPICAL SECTIONS

| NO | REVISION | DATE |
|---|---|---|
| | | |

| | |
|---|---|
| SURVEY | NHL |
| DRAWN | ACD |
| DESIGNED | KMS |
| CHECKED | KMS |
| APPROVED | DDB |
| PROJ. NO. | 193802390 |

SHEET NUMBER
C1.01

Plot Date: 02/20/2014 11:53am
Drawing Name: J:\193802390\Active\193802390\CAD\Dwg\193802390_C100.dwg
Xrefs: 193802390_BORDER

THE CONTRACTOR SHALL VERIFY AND BE RESPONSIBLE FOR ALL DIMENSIONS. DO NOT SCALE THE DRAWING - ANY ERRORS OR OMISSIONS SHALL BE REPORTED TO STANTEC WITHOUT DELAY. THE COPYRIGHTS TO ALL DESIGNS AND DRAWINGS ARE THE PROPERTY OF STANTEC. REPRODUCTION OR USE FOR ANY PURPOSE OTHER THAN THAT AUTHORIZED BY STANTEC IS FORBIDDEN.

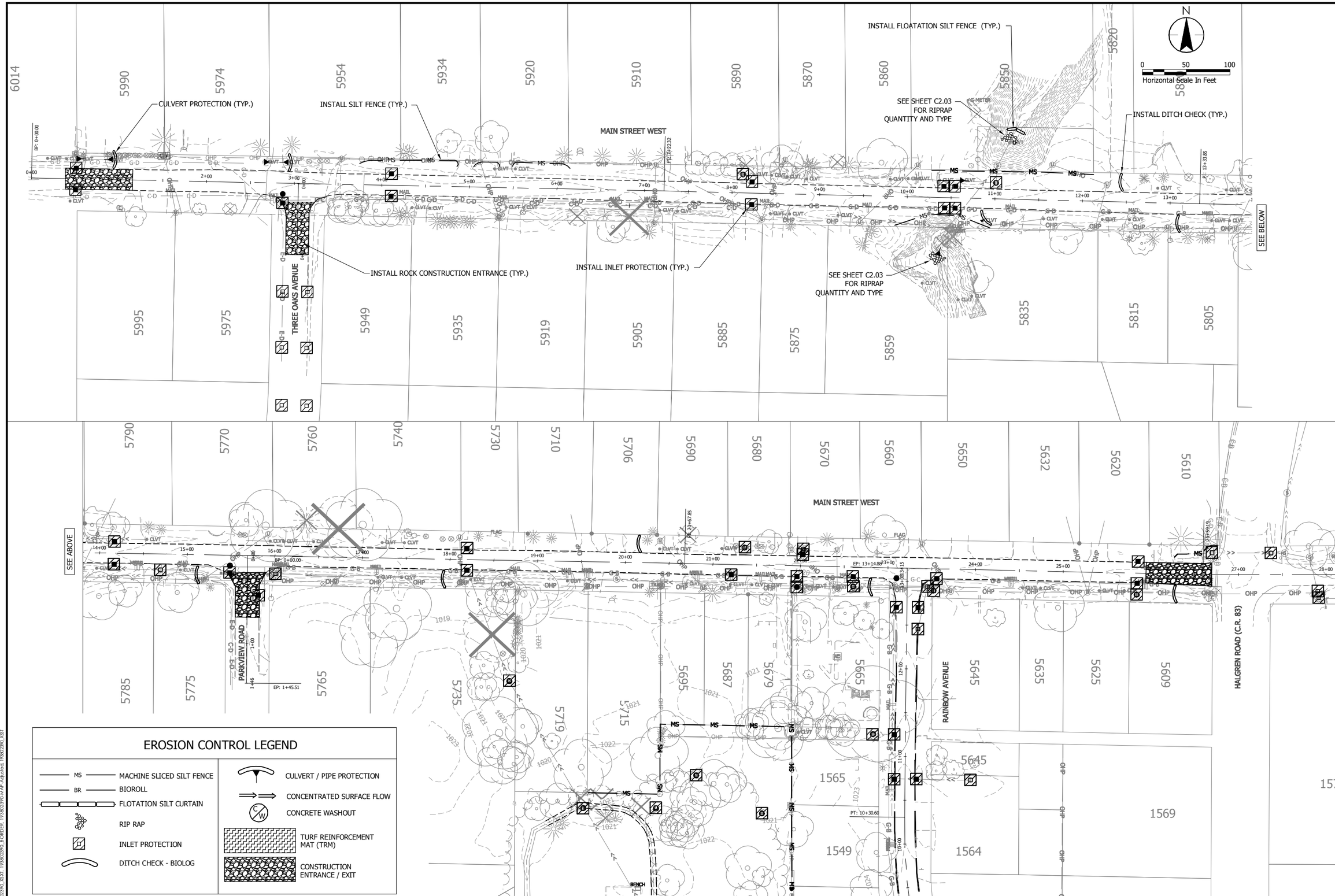


## EROSION CONTROL LEGEND

| | |
|---|---|
| MS — MACHINE SLICED SILT FENCE | CULVERT / PIPE PROTECTION |
| BR — BIOROLL | CONCENTRATED SURFACE FLOW |
| FLOTATION SILT CURTAIN | CONCRETE WASHOUT |
| RIP RAP | TURF REINFORCEMENT MAT (TRM) |
| INLET PROTECTION | CONSTRUCTION ENTRANCE / EXIT |
| DITCH CHECK - BIOLOG | |

Stantec
2335 Highway 36 W
St. Paul, MN 55113
www.stantec.com

I HEREBY CERTIFY THAT THIS PLAN, SPECIFICATION OR REPORT WAS PREPARED BY ME OR UNDER MY DIRECT SUPERVISION AND THAT I AM A DULY LICENSED PROFESSIONAL ENGINEER UNDER THE LAWS OF THE STATE OF MINNESOTA.

PRINT NAME: KELLIE M. SCHIEGEL

SIGNATURE: _____ LIC. NO. 46000

DATE: 02/20/2014

# CITY OF MAPLE PLAIN, MINNESOTA

## MAIN ST W AND RAINBOW AVE UTILITY AND STREET IMPROVEMENTS

MAIN STREET WEST
TEMPORARY EROSION CONTROL

| NO | REVISION | DATE |
|---|---|---|
| | | |

| | |
|---|---|
| SURVEY | NHL |
| DRAWN | ACD |
| DESIGNED | KMS |
| CHECKED | KMS |
| APPROVED | DDB |
| PROJ. NO. | 193802390 |

SHEET NUMBER
C2.01



Plot Date: 02/20/2014 2:38pm
Drawing: T:\2019\193802390\CADD\Civil\193802390_C-02-Doc\193802390_C2D.dwg
Layout: C2.01 User: kyle.schiegel
Xrefs: 193802390_XLV1, 193802390_BORDER, 193802390-WVP-Adjusted, 193802390_XST

THE CONTRACTOR SHALL VERIFY AND BE RESPONSIBLE FOR ALL DIMENSIONS. DO NOT SCALE THE DRAWING. ANY ERRORS OR OMISSIONS SHALL BE REPORTED TO STANTEC WITHOUT DELAY. THE COPYRIGHTS TO ALL DESIGNS AND DRAWINGS ARE THE PROPERTY OF STANTEC. REPRODUCTION OR USE FOR ANY PURPOSE OTHER THAN THAT AUTHORIZED BY STANTEC IS FORBIDDEN.

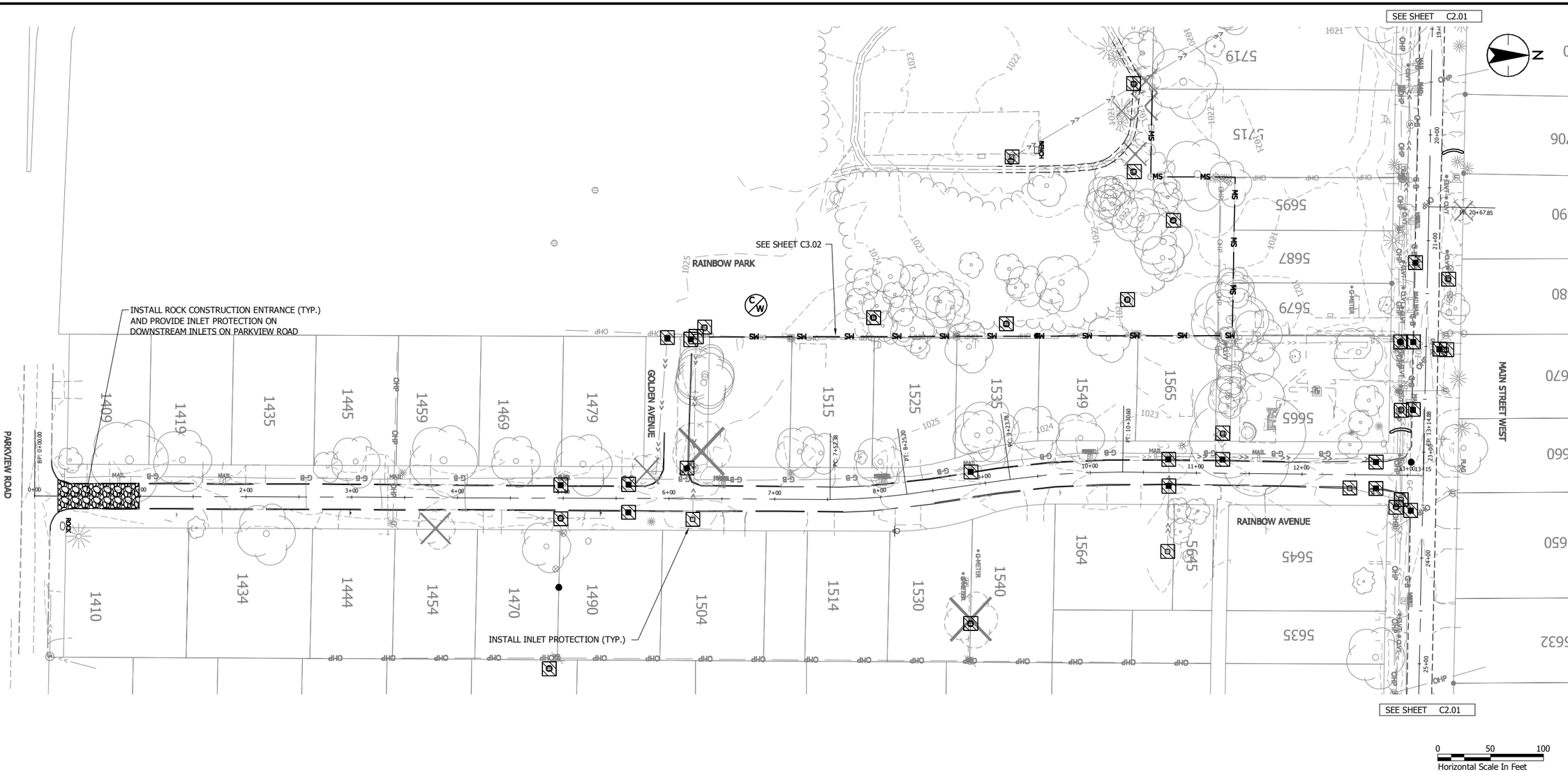


0 50 100
Horizontal Scale In Feet

## EROSION CONTROL LEGEND

| | |
|---|---|
| MS — MACHINE SLICED SILT FENCE | CULVERT / PIPE PROTECTION |
| BR — BIOROLL | CONCENTRATED SURFACE FLOW |
| FLOTATION SILT CURTAIN | CONCRETE WASHOUT |
| RIP RAP | TURF REINFORCEMENT MAT (TRM) |
| INLET PROTECTION | CONSTRUCTION ENTRANCE / EXIT |
| DITCH CHECK - BIOLOG | |

Stantec
2335 Highway 36 W
St. Paul, MN 55113
www.stantec.com

I HEREBY CERTIFY THAT THIS PLAN, SPECIFICATION OR REPORT WAS PREPARED BY ME OR UNDER MY DIRECT SUPERVISION AND THAT I AM A DULY LICENSED PROFESSIONAL ENGINEER UNDER THE LAWS OF THE STATE OF MINNESOTA.

PRINT NAME: KELLIE M. SCHIEGEL

SIGNATURE: _____ LIC. NO. 46000

DATE: 02/20/2014

# CITY OF MAPLE PLAIN, MINNESOTA

## MAIN ST W AND RAINBOW AVE UTILITY AND STREET IMPROVEMENTS

RAINBOW AVENUE
TEMPORARY EROSION CONTROL

| NO | REVISION | DATE |
|---|---|---|
| | | |

| | |
|---|---|
| SURVEY | NHL |
| DRAWN | ACD |
| DESIGNED | KMS |
| CHECKED | KMS |
| APPROVED | DDB |
| PROJ. NO. | 193802390 |

SHEET NUMBER
C2.02

Plot Date: 02/20/2014 - 2:29pm
Drawing: C:\Users\kyle.schiegel\AppData\Local\Temp\193802390\CAD\Dwg\193802390_C202.dwg
Xrefs: 193802390_XST, 193802390_BORDER, 193802390_MAP-Adjusted, 193802390_XST

THE CONTRACTOR SHALL VERIFY AND BE RESPONSIBLE FOR ALL DIMENSIONS. DO NOT SCALE THE DRAWING. ANY ERRORS OR OMISSIONS SHALL BE REPORTED TO STANTEC WITHOUT DELAY. THE COPYRIGHTS TO ALL DESIGNS AND DRAWINGS ARE THE PROPERTY OF STANTEC. REPRODUCTION OR USE FOR ANY PURPOSE OTHER THAN THAT AUTHORIZED BY STANTEC IS FORBIDDEN.

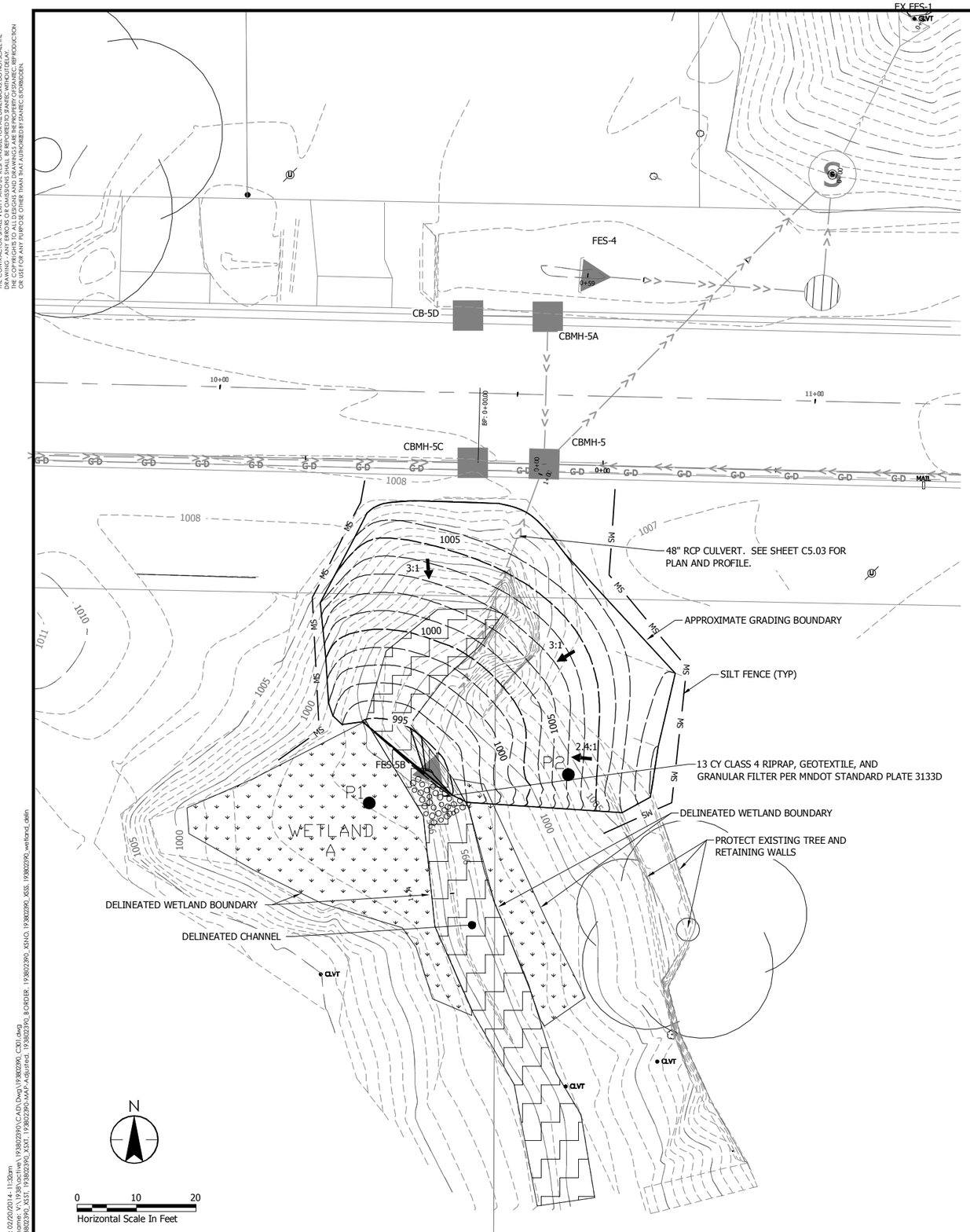


NOTES:

1. RESTORE ALL DISTURBED RAVINE AREAS WITH MNDOT SEED MIX 25-141 AND EROSION CONTROL BLANKET OR TURF REINFORCEMENT MAT AS SHOWN ON SHEET C2.01-C2.04.
2. INSTALL SILT FENCE AND OTHER EROSION CONTROL BMPS PRIOR TO EXCAVATION.
3. BEDDING FOR 48" CULVERT SHALL BE CLASS B PER DETAIL 1002 ON SHEET C8.01. PIPE BEDDING SHALL BE INCIDENTAL TO PIPE.

## GRADING LEGEND

| | |
|---|---|
| 952 | EXISTING CONTOUR MINOR |
| 950 | EXISTING CONTOUR MAJOR |
| 952 | PROPOSED CONTOUR MINOR |
| 950 | PROPOSED CONTOUR MAJOR |

Stantec
2335 Highway 36 W
St. Paul, MN 55113
www.stantec.com

I HEREBY CERTIFY THAT THIS PLAN, SPECIFICATION OR REPORT WAS PREPARED BY ME OR UNDER MY DIRECT SUPERVISION AND THAT I AM A DULY LICENSED PROFESSIONAL ENGINEER UNDER THE LAWS OF THE STATE OF MINNESOTA.

PRINT NAME: KELLIE M. SCHLEGEL

SIGNATURE: DATE: 02/20/2014 LIC. NO. 46200

# CITY OF MAPLE PLAIN, MINNESOTA

## MAIN ST W AND RAINBOW AVE UTILITY AND STREET IMPROVEMENTS

GRADING PLAN
RAVINE IMPROVEMENTS

| NO | REVISION | DATE |
|---|---|---|
| | | |

| | |
|---|---|
| SURVEY | NHL |
| DRAWN | ACD |
| DESIGNED | KMS |
| CHECKED | KMS |
| APPROVED | DDB |
| PROJ. NO. | 193802390 |

SHEET NUMBER
C3.01

THE CONTRACTOR SHALL VERIFY AND BE RESPONSIBLE FOR ALL DIMENSIONS. DO NOT SCALE THE DRAWING. ANY ERRORS OR OMISSIONS SHALL BE REPORTED TO STANTEC WITHOUT DELAY. THE COPYRIGHTS TO ALL DESIGNS AND DRAWINGS ARE THE PROPERTY OF STANTEC. REPRODUCTION OR USE FOR ANY PURPOSE OTHER THAN THAT AUTHORIZED BY STANTEC IS FORBIDDEN.

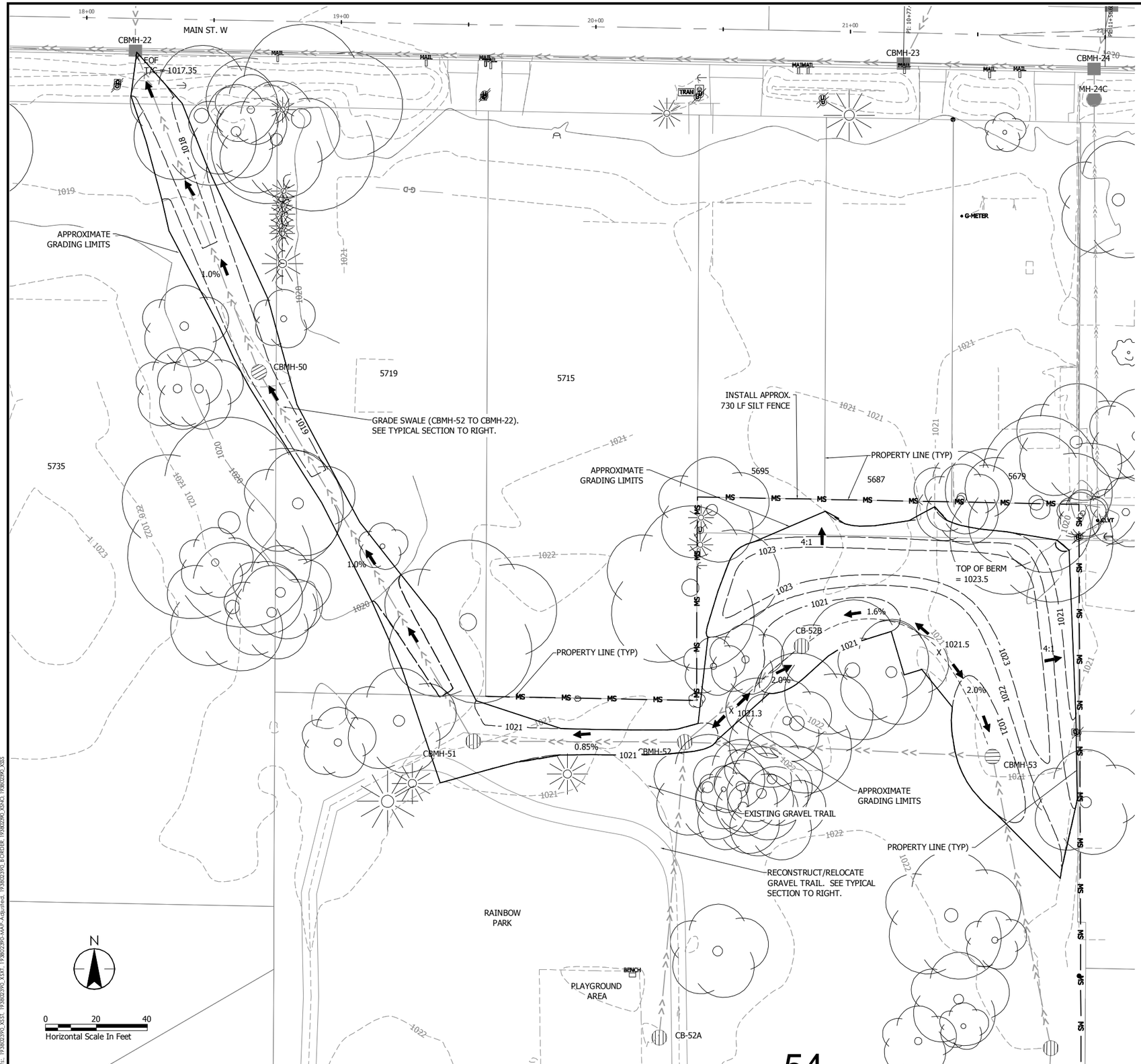


NOTES:
1. RESTORE ALL DISTURBED AREAS WITH MNDOT SEED MIX 25-141 AND HYDROMULCH AS SPECIFIED.
2. SEE SHEET C5.06 FOR STORM SEWER PLAN AND PROFILE.

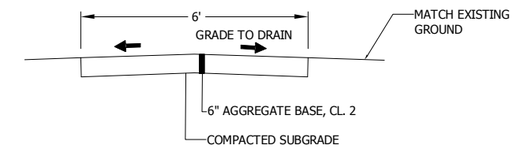


TYPICAL SECTION - AGGREGATE TRAIL

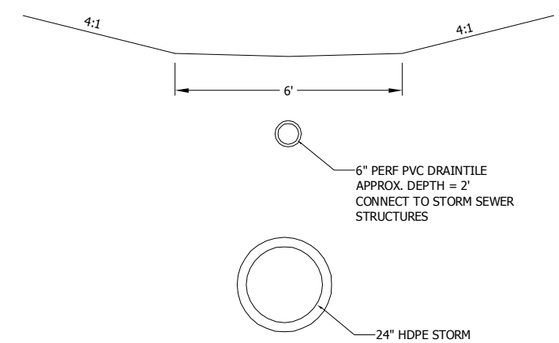


TYPICAL SECTION - SWALE

## GRADING LEGEND

| | |
|---|---|
| 952 | EXISTING CONTOUR MINOR |
| 950 | EXISTING CONTOUR MAJOR |
| 952 | PROPOSED CONTOUR MINOR |
| 950 | PROPOSED CONTOUR MAJOR |

Stantec
2335 Highway 36 W
St. Paul, MN 55113
www.stantec.com

I HEREBY CERTIFY THAT THIS PLAN, SPECIFICATION OR REPORT WAS PREPARED BY ME OR UNDER MY DIRECT SUPERVISION AND THAT I AM A DULY LICENSED PROFESSIONAL ENGINEER UNDER THE LAWS OF THE STATE OF MINNESOTA.

PRINT NAME: KELLIE M. SCHIEGEL

SIGNATURE: DATE: 02/20/2014 LIC. NO. 46900

# CITY OF MAPLE PLAIN, MINNESOTA

## MAIN ST W AND RAINBOW AVE UTILITY AND STREET IMPROVEMENTS

RAINBOW PARK
GRADING PLAN

| NO | REVISION | DATE |
|---|---|---|
| | | |

| | |
|---|---|
| SURVEY | NHL |
| DRAWN | ACD |
| DESIGNED | KMS |
| CHECKED | KMS |
| APPROVED | DDB |
| PROJ. NO. | 193802390 |

SHEET NUMBER
C3.02

Plot Date: 02/19/2014 - 12:54pm
Drawing: P:\193802390\CAD\Dwg\193802390_C3D.dwg
Xrefs: 193802390_XSTI 193802390_XSOT 193802390-MAP-Adjusted 193802390_B-BORDER 193802390_XSNO 193802390_XSS

THE CONTRACTOR SHALL VERIFY AND BE RESPONSIBLE FOR ALL DIMENSIONS. DO NOT SCALE THE DRAWING. ANY ERRORS OR OMISSIONS SHALL BE REPORTED TO STANTEC WITHOUT DELAY. THE COPYRIGHTS TO ALL DESIGNS AND DRAWINGS ARE THE PROPERTY OF STANTEC. REPRODUCTION OR USE FOR ANY PURPOSE OTHER THAN THAT AUTHORIZED BY STANTEC IS FORBIDDEN.

NOTES:

1. PROVIDE TEMPORARY WATER SERVICE TO ALL RESIDENTS DURING WATERMAIN REPLACEMENT AS SPECIFIED.
2. MAINTAIN MINIMUM 10' HORIZONTAL SEPARATION BETWEEN WATERMAIN AND ALL SEWER.
3. ALL WATER SERVICES SHALL BE 1" TYPE "K" COPPER AND ALL SANITARY SEWER SERVICES 4" PVC SCHEDULE 40.
4. ALL SANITARY SEWER MAIN TO BE PVC, SDR-35 UNLESS OTHERWISE NOTED.
5. ALL WATER MAIN TO BE C900 PVC, DR 18 WITH A MINIMUM OF 7.5' OF COVER.
6. EXISTING SERVICE LOCATIONS ARE APPROXIMATE. CONTRACTOR TO FIELD VERIFY ALL SERVICE LOCATIONS AND DEPTHS PRIOR TO REPLACEMENT.
7. INACTIVE SERVICES ARE TO BE ABANDONED BY CONTRACTOR.

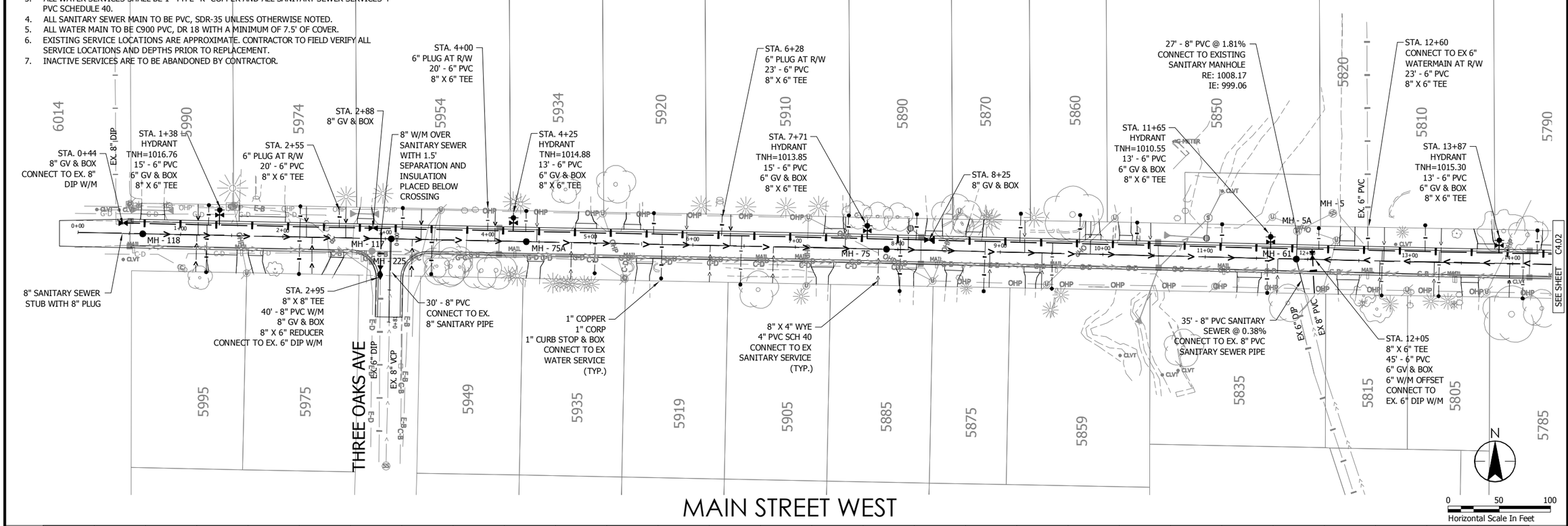


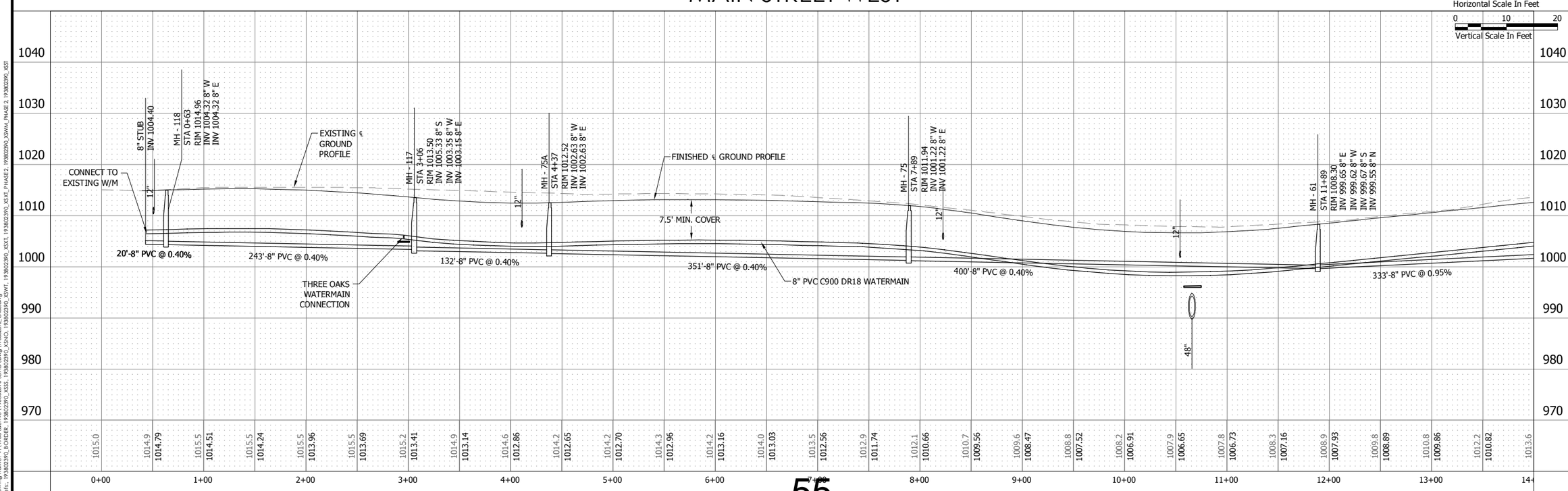


Stantec
2335 Highway 36 W
St. Paul, MN 55113
www.stantec.com

I HEREBY CERTIFY THAT THIS PLAN, SPECIFICATION, OR REPORT WAS PREPARED BY ME OR UNDER MY DIRECT SUPERVISION AND THAT I AM A DULY LICENSED PROFESSIONAL ENGINEER UNDER THE LAWS OF THE STATE OF MINNESOTA.

PRINT NAME: KELLIE M. SCHIEGEL

SIGNATURE:

DATE: 02/20/2014

LIC. NO. 46900

# CITY OF MAPLE PLAIN, MINNESOTA

## MAIN ST W AND RAINBOW AVE UTILITY AND STREET IMPROVEMENTS

MAIN STREET WEST

SANITARY SEWER AND WATERMAIN PLAN & PROFILE

| NO | REVISION | DATE |
|---|---|---|
| | | |

| | |
|---|---|
| SURVEY | NHL |
| DRAWN | ACD |
| DESIGNED | KMS |
| CHECKED | KMS |
| APPROVED | DDB |
| PROJ. NO. | 193802390 |

SHEET NUMBER
C4.01

Plot Date: 02/20/2014 - 9:40am
Drawing: \\ca0006-m1\work\193802390\CAD\Dwg\193802390_C4D.dwg
Xrefs: 193802390_BORDER, 193802390_XSS1, 193802390_XSW1, 193802390_XSX1, 193802390_XSX1_PHASE 2, 193802390_XSW1A_PHASE 2, 193802390_XSST

THE CONTRACTOR SHALL VERIFY AND BE RESPONSIBLE FOR ALL DIMENSIONS. DO NOT SCALE THE DRAWING. ANY ERRORS OR OMISSIONS SHALL BE REPORTED TO STANTEC WITHOUT DELAY. THE COPYRIGHTS TO ALL DESIGNS AND DRAWINGS ARE THE PROPERTY OF STANTEC. REPRODUCTION OR USE FOR ANY PURPOSE OTHER THAN THAT AUTHORIZED BY STANTEC IS FORBIDDEN.

NOTES:

1. PROVIDE TEMPORARY WATER SERVICE TO ALL RESIDENTS DURING WATERMAIN REPLACEMENT AS SPECIFIED.
2. MAINTAIN MINIMUM 10' HORIZONTAL SEPARATION BETWEEN WATERMAIN AND ALL SEWER.
3. ALL WATER SERVICES SHALL BE 1" TYPE "K" COPPER AND ALL SANITARY SEWER SERVICES 4" PVC SCHEDULE 40.
4. ALL SANITARY SEWER MAIN TO BE PVC, SDR-35 UNLESS OTHERWISE NOTED.
5. ALL WATER MAIN TO BE C900 PVC, DR 18 WITH A MINIMUM OF 7.5' OF COVER.
6. EXISTING SERVICE LOCATIONS ARE APPROXIMATE. CONTRACTOR TO FIELD VERIFY ALL SERVICE LOCATIONS AND DEPTHS PRIOR TO REPLACEMENT.
7. INACTIVE SERVICES ARE TO BE ABANDONED BY CONTRACTOR.

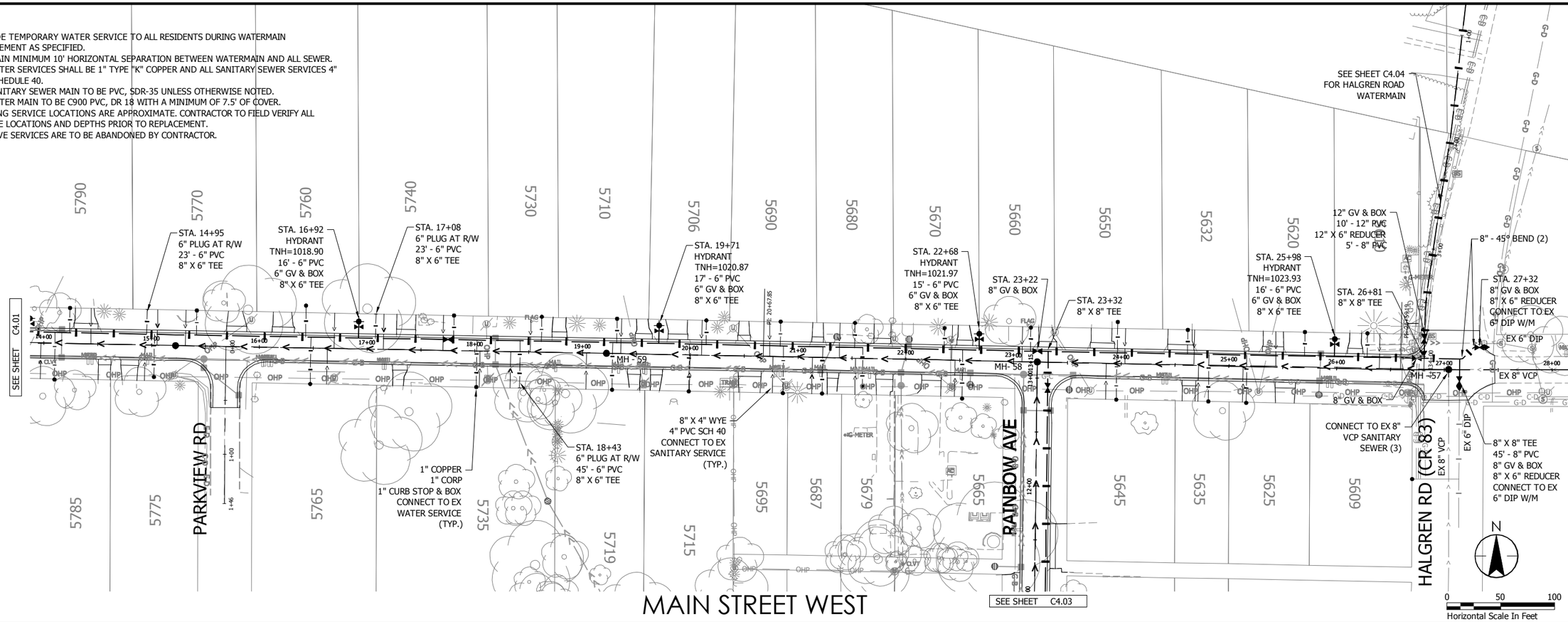


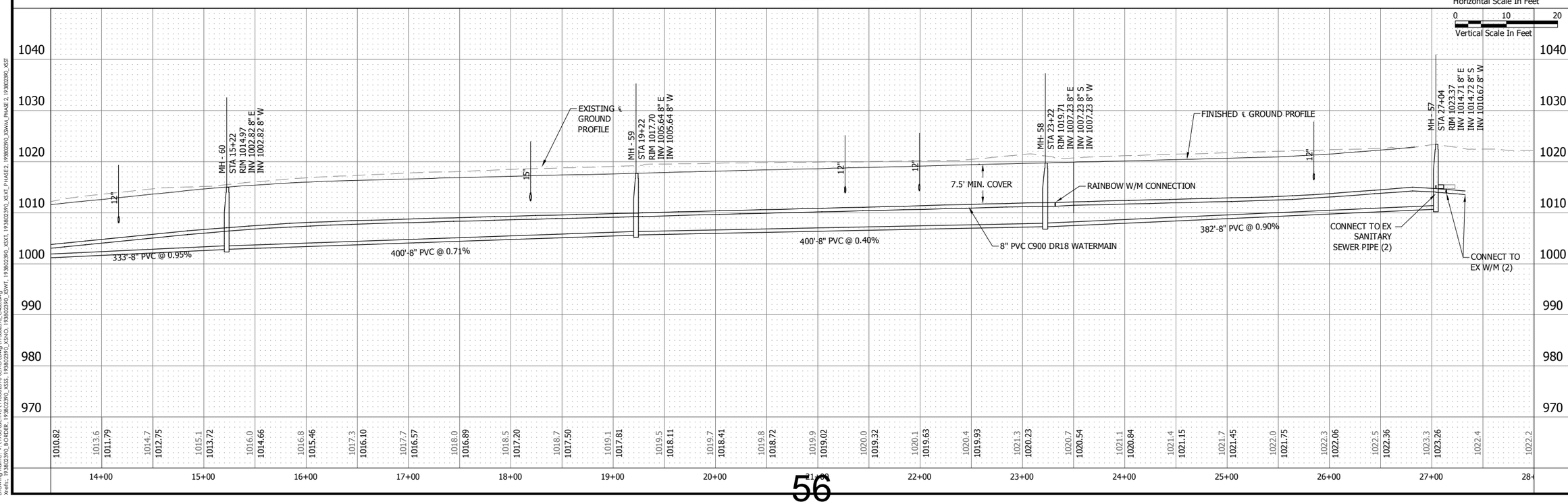


Stantec
2335 Highway 36 W
St. Paul, MN 55113
www.stantec.com

I HEREBY CERTIFY THAT THIS PLAN, SPECIFICATION, OR REPORT WAS PREPARED BY ME OR UNDER MY DIRECT SUPERVISION AND THAT I AM A DULY LICENSED PROFESSIONAL ENGINEER UNDER THE LAWS OF THE STATE OF MINNESOTA.

PRINT NAME: KELLIE M. SCHIEGEL

SIGNATURE: _____ LIC. NO. 46000

DATE: 02/20/2014

# CITY OF MAPLE PLAIN, MINNESOTA

## MAIN ST W AND RAINBOW AVE UTILITY AND STREET IMPROVEMENTS

MAIN STREET WEST

SANITARY SEWER AND WATERMAIN PLAN & PROFILE

| NO | REVISION | DATE |
|---|---|---|
| | | |

| | |
|---|---|
| SURVEY | NHL |
| DRAWN | ACD |
| DESIGNED | KMS |
| CHECKED | KMS |
| APPROVED | DDB |
| PROJ. NO. | 193802390 |

SHEET NUMBER
C4.02

Plot Date: 02/20/2014 - 10:46am
Drawing: \\ca0ma0dc1\Projects\1\193802390\CAD\Dwg\193802390_C4D.dwg
Xrefs: 193802390_BORDER, 193802390_XSS1, 193802390_XSHO, 193802390_XSW1, 193802390_XSX1, 193802390_XSX1_PHASE 2, 193802390_XSX1_PHASE 2, 193802390_XSWM, PHASE 2, 193802390_XSST

THE CONTRACTOR SHALL VERIFY AND BE RESPONSIBLE FOR ALL DIMENSIONS. DO NOT SCALE THE DRAWING - ANY ERRORS OR OMISSIONS SHALL BE REPORTED TO STANTEC WITHOUT DELAY. THE COPYRIGHTS TO ALL DESIGNS AND DRAWINGS ARE THE PROPERTY OF STANTEC. REPRODUCTION OR USE FOR ANY PURPOSE OTHER THAN THAT AUTHORIZED BY STANTEC IS FORBIDDEN.

NOTES:
1. PROVIDE TEMPORARY WATER SERVICE TO ALL RESIDENTS DURING WATERMAIN REPLACEMENT AS SPECIFIED.
2. WATER MAIN TO BE INSTALLED WITH 10' SEPARATION FROM NEW SANITARY SEWER MAIN OR AS DIRECT BY ENGINEER.
3. ALL WATER SERVICES SHALL BE 1" TYPE "K" COPPER AND ALL SANITARY SEWER SERVICES 4" PVC SCHEDULE 40.
4. ALL SANITARY SEWER MAIN TO BE PVC, SDR-35 UNLESS OTHERWISE NOTED.
5. ALL WATER MAIN TO BE C900 PVC, DR 18 WITH A MINIMUM OF 7.5' OF COVER.
6. EXISTING SERVICE LOCATIONS ARE APPROXIMATE. CONTRACTOR TO FIELD VERIFY ALL SERVICE LOCATIONS AND DEPTHS PRIOR TO REPLACEMENT.
7. INACTIVE SERVICES ARE TO BE ABANDONED BY CONTRACTOR.

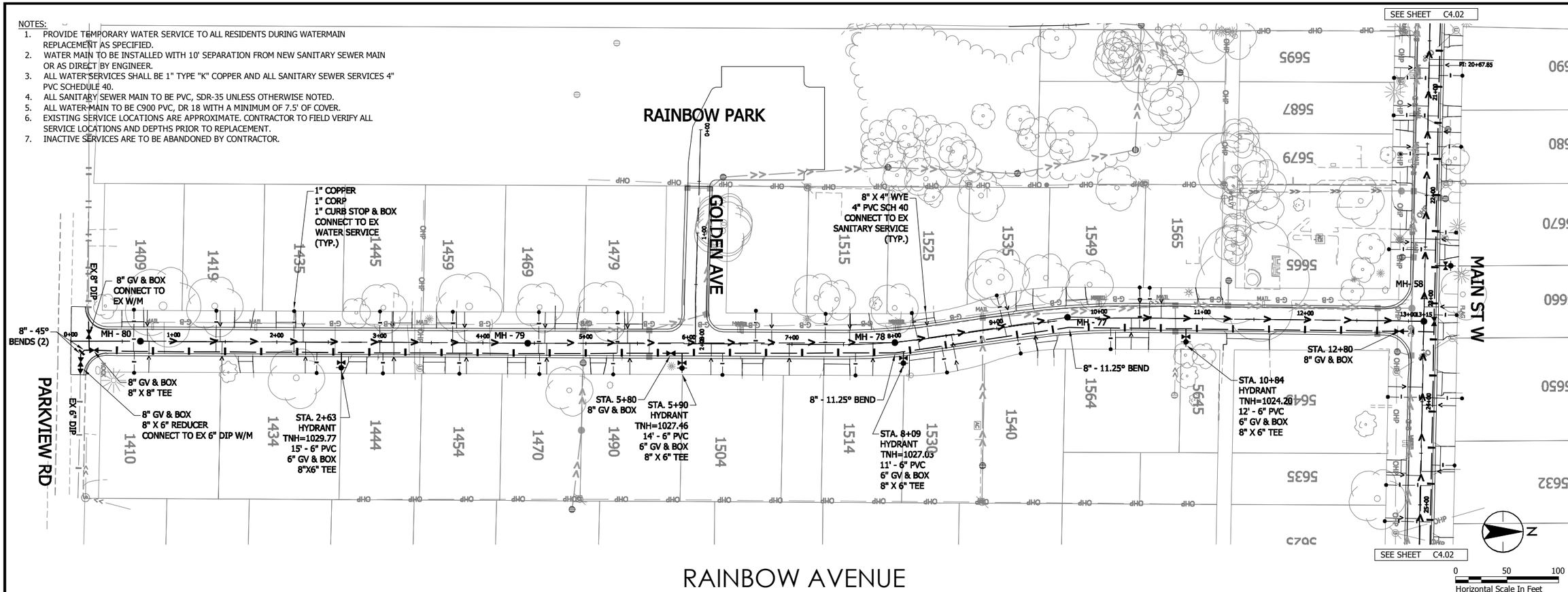


RAINBOW AVENUE

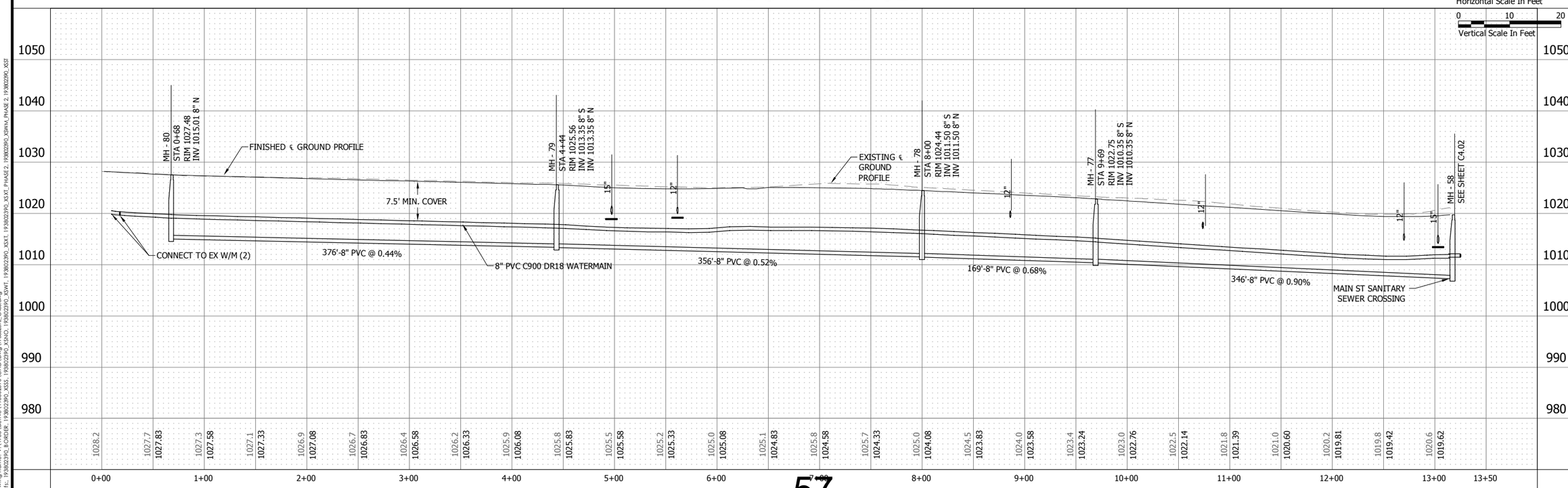


Stantec
2335 Highway 36 W
St. Paul, MN 55113
www.stantec.com

I HEREBY CERTIFY THAT THIS PLAN, SPECIFICATION OR REPORT WAS PREPARED BY ME OR UNDER MY DIRECT SUPERVISION AND THAT I AM A DULY LICENSED PROFESSIONAL ENGINEER UNDER THE LAWS OF THE STATE OF MINNESOTA.

PRINT NAME: KELLIE M. SCHIEGEL

SIGNATURE: _____ LIC. NO. 46000

DATE: 02/20/2014

# CITY OF MAPLE PLAIN, MINNESOTA

## MAIN ST W AND RAINBOW AVE UTILITY AND STREET IMPROVEMENTS

RAINBOW AVENUE

SANITARY SEWER AND WATERMAIN PLAN & PROFILE

| NO | REVISION | DATE |
|---|---|---|
| | | |

| | |
|---|---|
| SURVEY | NHL |
| DRAWN | ACD |
| DESIGNED | KMS |
| CHECKED | KMS |
| APPROVED | DDB |
| PROJ. NO. | 193802390 |

SHEET NUMBER
C4.03

THE CONTRACTOR SHALL VERIFY AND BE RESPONSIBLE FOR ALL DIMENSIONS. DO NOT SCALE THE DRAWING. ANY ERRORS OR OMISSIONS SHALL BE REPORTED TO STANTEC WITHOUT DELAY. THE COPYRIGHTS TO ALL DESIGNS AND DRAWINGS ARE THE PROPERTY OF STANTEC. REPRODUCTION OR USE FOR ANY PURPOSE OTHER THAN THAT AUTHORIZED BY STANTEC IS FORBIDDEN.

NOTES:

1. CASING TO EXTEND 50' BEYOND EITHER SIDE OF TRACK CENTERLINE
2. TOP OF CASING PIPE MUST BE AT LEAST 6.0' BELOW BASE OF RAIL
3. ALL EXCAVATIONS/PITS MUST BE AT LEAST 30' FROM THE TRACK CENTERLINE
4. MAIN STREET/HALGREN ROAD PATCH TO MATCH EXISTING SECTION
5. ALL DISTURBED AREAS TO BE RESTORED WITH MNDOT 25-141 SEED MIX AND MULCH (LESS THAN 3:1) OR EROSION CONTROL BLANKET (3:1 SLOPES OR STEEPER).
6. ALL TRAFFIC CONTROL DEVICES AND OTHER PROTECTIVE MEASURES TO CONFORM TO MMUTCD. PROVIDE LANE SHIFT FOR HALGREN ROAD AS NEEDED. CONTRACTOR TO OBTAIN APPROVAL FROM HENNEPIN COUNTY PRIOR TO IMPLEMENTATION.
7. HALGREN ROAD/MAIN STREET PATCH MUST BE PAVED PRIOR TO REMOVAL OF HALGREN ROAD LANE SHIFT.
8. ROAD CLOSURE OF HALGREN ROAD IS NOT PERMITTED AT ANY TIME. CONTRACTOR TO FOLLOW THE REQUIREMENTS OF THE HENNEPIN COUNTY UTILITY/RIGHT OF WAY USE PERMIT FOR TEMPORARY LANE CLOSURE AND UTILITY WORK IN THE RIGHT OF WAY.
9. ALL WATERMAIN TO HAVE MINIMUM OF 7.5' OF COVER. WATERMAIN OVERDEPTH IS INCIDENTAL.
10. CONTRACTOR SHALL POTHOLE EXISTING WATERMAIN ON MAIN STREET WEST PRIOR TO DRILLING OPERATIONS.
11. CONTRACTOR MAY NEED TO COORDINATE WITH POWER COMPANY TO HOLD UTILITY POLE AT CORNER OF MAIN STREET WEST AND HALGREN ROAD.
12. CONTRACTOR MUST MAINTAIN A MINIMUM 6' OF SEPARATION BETWEEN ALL PIPE/DRILLING EQUIPMENT AND THE PILING SUPPORTING THE BRIDGE.

SUBSURFACE UTILITY INFORMATION:

THE SUBSURFACE UTILITY INFORMATION ON THIS PLAN IS SHOWN TO UTILITY QUALITY LEVEL IN ACCORDANCE WITH LEGEND PROVIDED BELOW. THIS QUALITY LEVEL WAS DETERMINED ACCORDING TO THE GUIDELINES OF CI/ASCE 38-02, ENTITLED STANDARD GUIDELINES FOR THE COLLECTION AND DEPICTION OF EXISTING SUBSURFACE UTILITY DATA. UTILITY DESIGNATIONS ARE SHOWN ON DRAWING G0.02.

UTILITY QUALITY LEVELS:

LEVEL D - INFORMATION COMES SOLELY FROM EXISTING UTILITY RECORDS.

LEVEL C - SURVEYING ABOVE GROUND UTILITY FACILITIES, SUCH AS MANHOLES, VALVE BOXES, ETC; AND CORRELATING THIS INFORMATION WITH EXISTING UTILITY RECORDS.

LEVEL B - THE USE OF SURFACE GEOPHYSICAL TECHNIQUES TO DETERMINE THE EXISTENCE AND HORIZONTAL POSITION OF UNDERGROUND UTILITIES.

LEVEL A - THE USE OF NONDESTRUCTIVE DIGGING EQUIPMENT AT HORIZONTAL AND VERTICAL POSITION OF UNDERGROUND UTILITIES, AS WELL AS THE TYPE, SIZE, CONDITION, MATERIAL AND OTHER CHARACTERISTICS.

PRIVATE UTILITIES ARE SHOWN IN THE LOCATIONS PROVIDED BY THE OWNER PRIOR TO CONSTRUCTION.

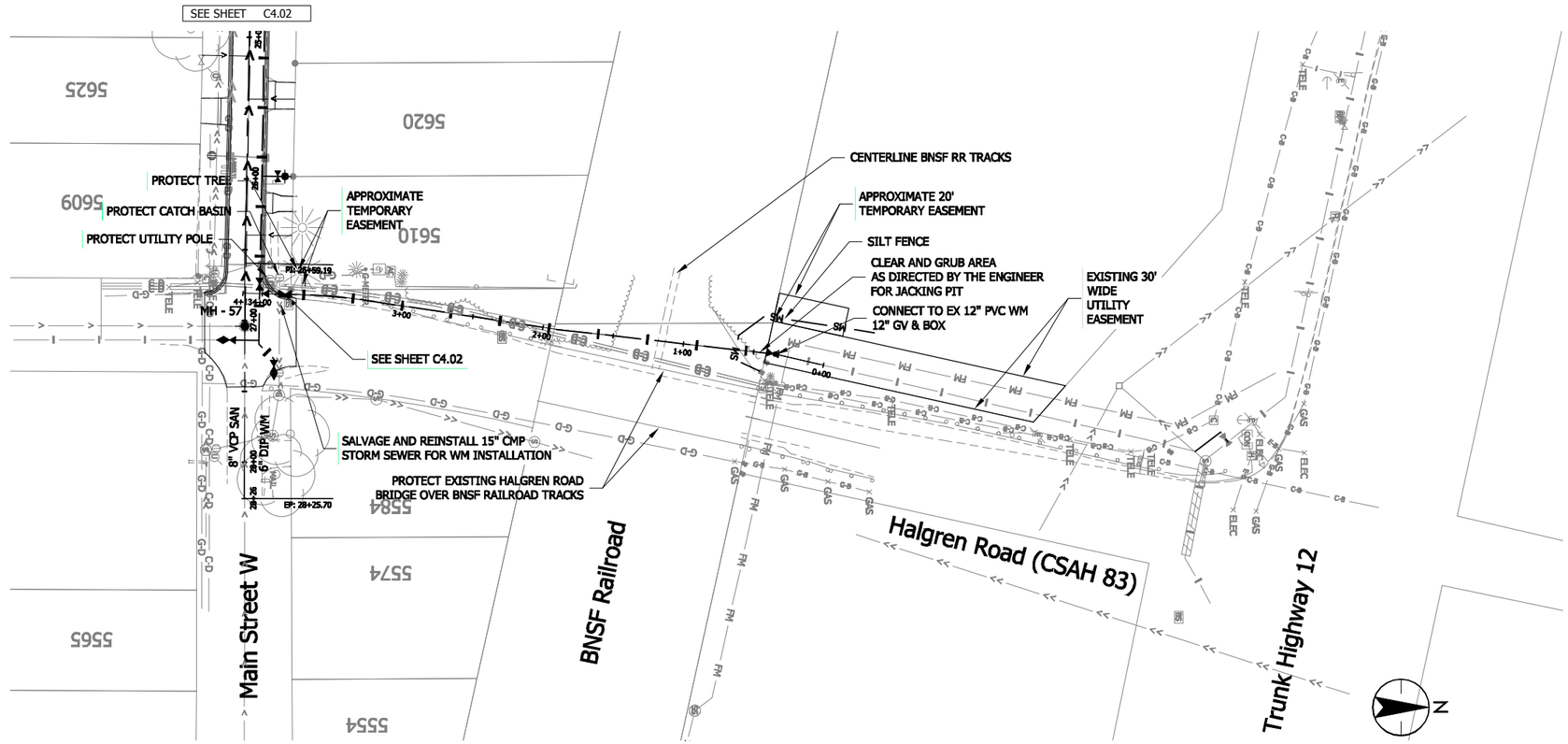


# WATER MAIN

0 50 100
Horizontal Scale In Feet

0 10 20
Vertical Scale In Feet

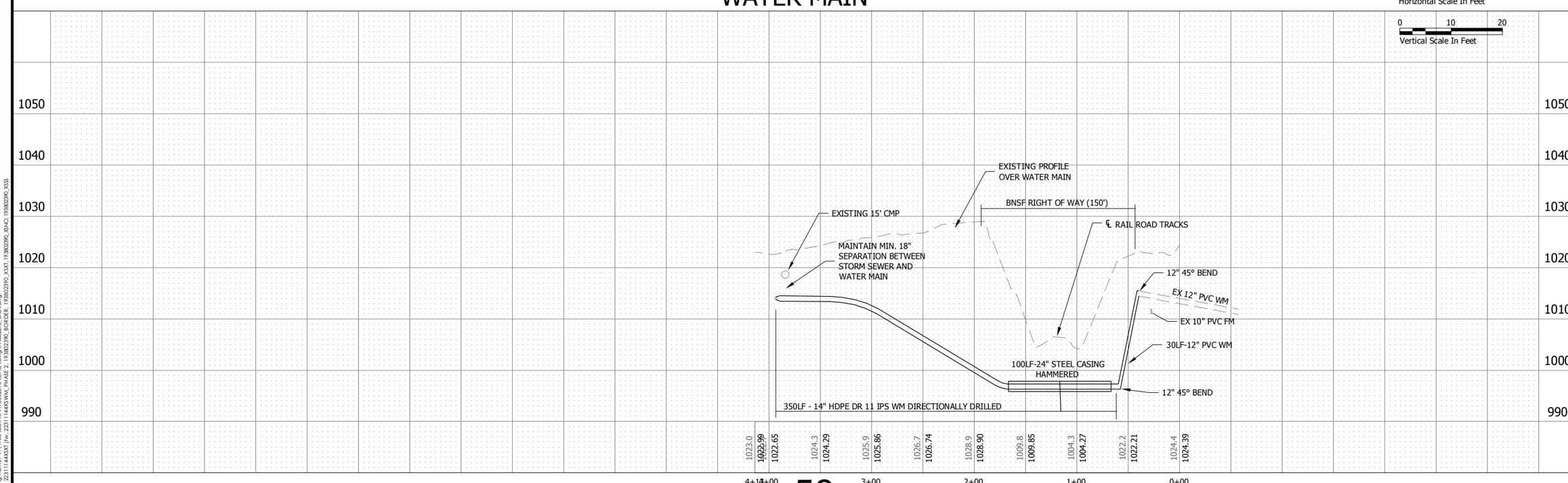




Stantec
2335 Highway 36 W
St. Paul, MN 55113
www.stantec.com

I HEREBY CERTIFY THAT THIS PLAN, SPECIFICATION OR REPORT WAS PREPARED BY ME OR UNDER MY DIRECT SUPERVISION AND THAT I AM A DULY LICENSED PROFESSIONAL ENGINEER UNDER THE LAWS OF THE STATE OF MINNESOTA.

PRINT NAME: KELLIE M. SCHIEGEL

SIGNATURE: ____ DATE: 02/20/2014 LIC. NO. 46900

CITY OF MAPLE PLAIN, MINNESOTA
MAIN ST W AND RAINBOW AVE UTILITY AND STREET IMPROVEMENTS
HALGREN ROAD
WATER MAIN PLAN & PROFILE

| NO | REVISION | DATE |
|---|---|---|
| | | |

| | |
|---|---|
| SURVEY | NHL |
| DRAWN | ACD |
| DESIGNED | KMS |
| CHECKED | KMS |
| APPROVED | DDB |
| PROJ. NO. | 193802390 |

SHEET NUMBER
C4.04

Plot Date: 02/20/2014 2:40pm
Drawing: J:\193802390\CAD\Dwg\193802390-C404.dwg
Xrefs: "2231114AXX"|hw v2231114AXX WIA_PHASE 2 , 193802390_BORDER , 193802390_XSXT , 193802390_ASMO , 193802390_XSSS

THE CONTRACTOR SHALL VERIFY AND BE RESPONSIBLE FOR ALL DIMENSIONS. DO NOT SCALE THE DRAWING. ANY ERRORS OR OMISSIONS SHALL BE REPORTED TO STANTEC WITHOUT DELAY. THE COPYRIGHTS TO ALL DESIGNS AND DRAWINGS ARE THE PROPERTY OF STANTEC. REPRODUCTION OR USE FOR ANY PURPOSE OTHER THAN THAT AUTHORIZED BY STANTEC IS FORBIDDEN.

NOTES:

1. ALL STORM SEWER SHALL BE RCP, CLASS 5, UNLESS OTHERWISE NOTED.
2. INSTALL DRAIN TILE PER STANDARD DETAILS AND TYPICAL SECTIONS.
3. CONTRACTOR SHALL RECONNECT ALL EXISTING PRIVATE DRAINTILE/SUMP LINES TO PROPOSED DRAINTILE ALONG NEW CURB. LOCATIONS OF THESE LINES ARE NOT KNOWN BUT SHOULD BE ANTICIPATED IN THE FIELD.
4. AT PROPERTIES WHERE NO EXISTING SUMP LINE IS FOUND, CONTRACTOR TO INSTALL STUB FROM NEW ROADWAY DRAINTILE TO THE PROPERTY LINE AT A LOCATION TO BE DETERMINED IN THE FIELD BY THE ENGINEER.
5. RAIN GARDEN LOCATIONS ARE SHOWN IN A GENERAL MANNER. FINAL RAIN GARDEN LOCATIONS AND DIMENSIONS TO BE DETERMINED BY THE ENGINEER IN THE FIELD.

MAIN STREET WEST

0 50 100
Horizontal Scale In Feet

0 10 20
Vertical Scale In Feet

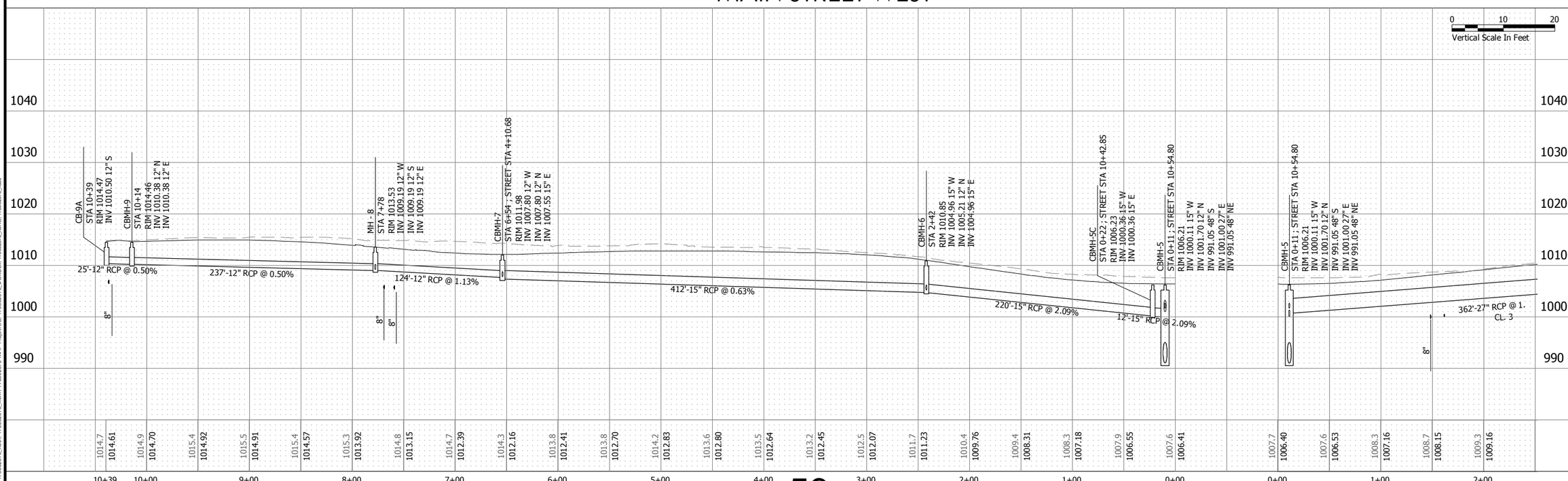


Stantec
2335 Highway 36 W
St. Paul, MN 55113
www.stantec.com

I HEREBY CERTIFY THAT THIS PLAN, SPECIFICATION OR REPORT WAS PREPARED BY ME OR UNDER MY DIRECT SUPERVISION AND THAT I AM A DULY LICENSED PROFESSIONAL ENGINEER UNDER THE LAWS OF THE STATE OF MINNESOTA.

PRINT NAME: KELLIE M. SCHLEGEL

SIGNATURE: DATE: 02/20/2014 LIC. NO. 46200

# CITY OF MAPLE PLAIN, MINNESOTA

## MAIN ST W AND RAINBOW AVE UTILITY AND STREET IMPROVEMENTS

MAIN STREET WEST

STORM SEWER PLAN & PROFILE

| NO | REVISION | DATE |
|---|---|---|

| | |
|---|---|
| SURVEY | NHL |
| DRAWN | ACD |
| DESIGNED | KMS |
| CHECKED | KMS |
| APPROVED | DDB |
| PROJ. NO. | 193802390 |

SHEET NUMBER
C5.01

THE CONTRACTOR SHALL VERIFY AND BE RESPONSIBLE FOR ALL DIMENSIONS. DO NOT SCALE THE DRAWING - ANY ERRORS OR OMISSIONS SHALL BE REPORTED TO STANTEC WITHOUT DELAY. THE COPYRIGHTS TO ALL DESIGNS AND DRAWINGS ARE THE PROPERTY OF STANTEC. REPRODUCTION OR USE FOR ANY PURPOSE OTHER THAN THAT AUTHORIZED BY STANTEC IS FORBIDDEN.

NOTES:

1. ALL STORM SEWER SHALL BE RCP, CLASS 5, UNLESS OTHERWISE NOTED.
2. INSTALL DRAIN TILE PER STANDARD DETAILS AND TYPICAL SECTIONS.
3. CONTRACTOR SHALL RECONNECT ALL EXISTING PRIVATE DRAINTILE/SUMP LINES TO PROPOSED DRAINTILE ALONG NEW CURB. LOCATIONS OF THESE LINES ARE NOT KNOWN BUT SHOULD BE ANTICIPATED IN THE FIELD.
4. AT PROPERTIES WHERE NO EXISTING SUMP LINE IS FOUND, CONTRACTOR TO INSTALL STUB FROM NEW ROADWAY DRAINTILE TO THE PROPERTY LINE AT A LOCATION TO BE DETERMINED IN THE FIELD BY THE ENGINEER.
5. RAIN GARDEN LOCATIONS ARE SHOWN IN A GENERAL MANNER. FINAL RAIN GARDEN LOCATIONS AND DIMENSIONS TO BE DETERMINED BY THE ENGINEER IN THE FIELD.

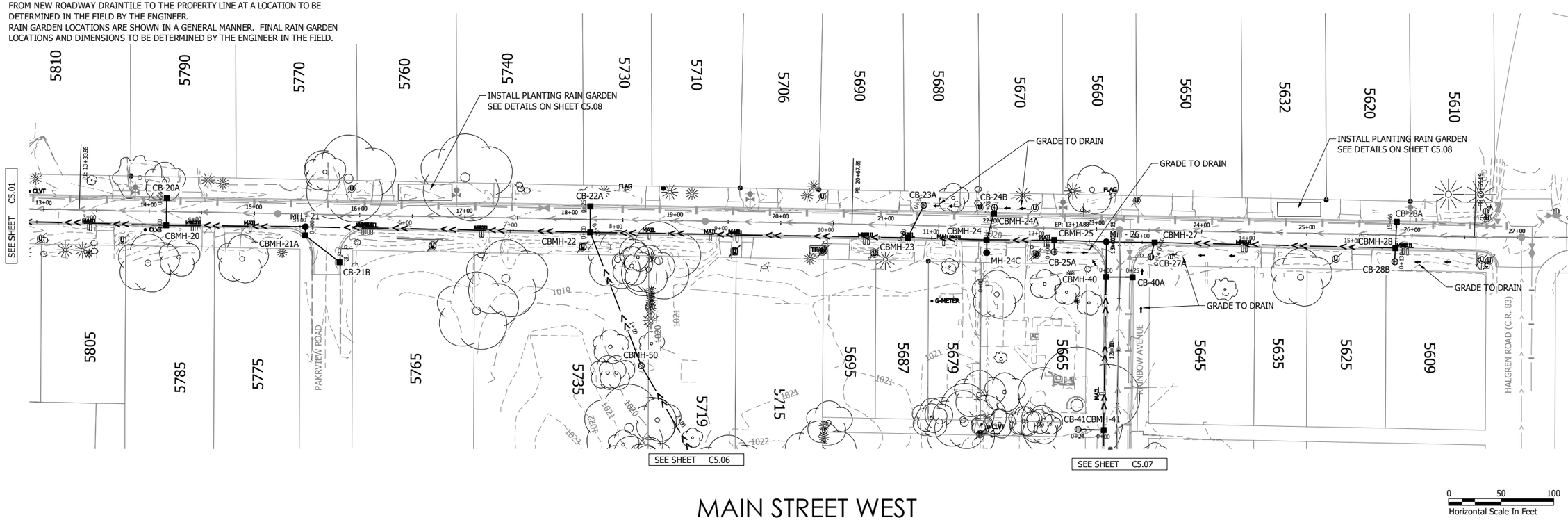


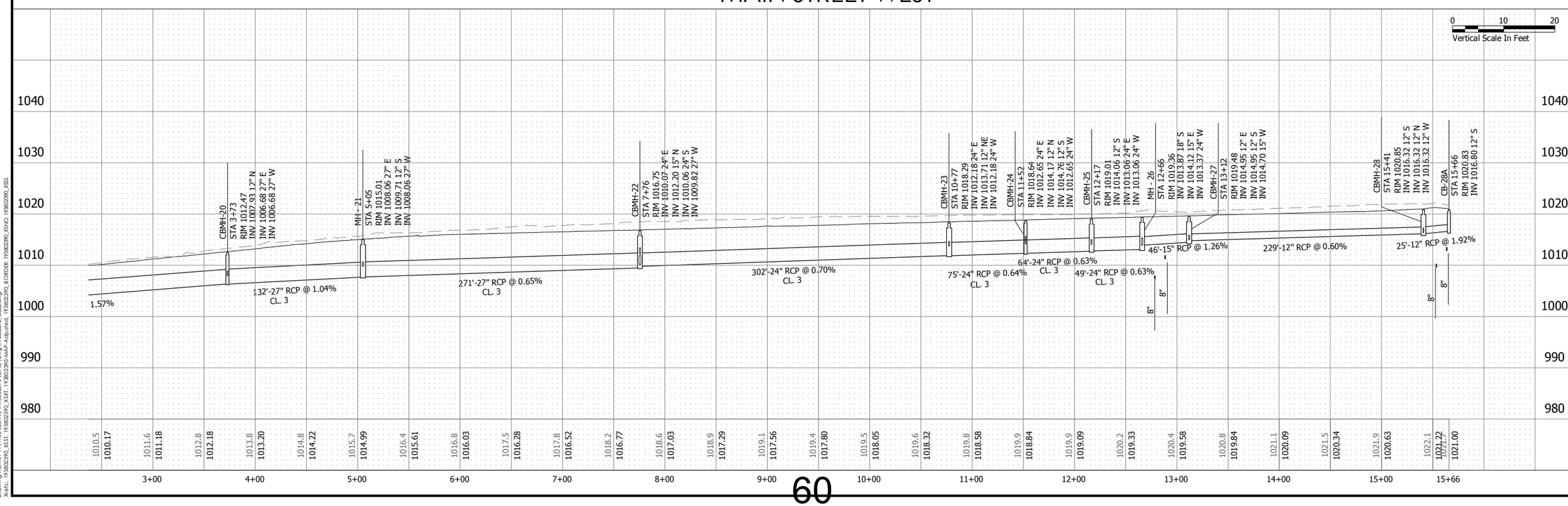


Stantec
2335 Highway 36 W
St. Paul, MN 55113
www.stantec.com

I HEREBY CERTIFY THAT THIS PLAN, SPECIFICATION OR REPORT WAS PREPARED BY ME OR UNDER MY DIRECT SUPERVISION AND THAT I AM A DULY LICENSED PROFESSIONAL ENGINEER UNDER THE LAWS OF THE STATE OF MINNESOTA.

PRINT NAME: KELLIE M. SCHIEGEL

SIGNATURE:

DATE: 02/20/2014

LIC. NO. 46200

# CITY OF MAPLE PLAIN, MINNESOTA

## MAIN ST W AND RAINBOW AVE UTILITY AND STREET IMPROVEMENTS

MAIN STREET WEST
STORM SEWER PLAN & PROFILE

| NO | REVISION | DATE |
|---|---|---|
| | | |

| | |
|---|---|
| SURVEY | NHL |
| DRAWN | ACD |
| DESIGNED | KMS |
| CHECKED | KMS |
| APPROVED | DDB |
| PROJ. NO. | 193802390 |

SHEET NUMBER
C5.02

Agenda Information Memorandum
February 24, 2014 Maple Plain City Council

**10. NEW BUSINESS**
**B. Approve and Award of Bid—Water Meter Replacement**

**ACTION TO BE CONSIDERED**

To award bid for the Water Meter Replacement project:

**FACTS**

- The City has bonded for and scheduled the replacement of water meters for 2014. The City closed bids on Tuesday, February 18, at 10 a.m. and received bids from three vendors:
    - Metering and Technology Solutions
    - Dakota Supply Group
    - HD Supply Waterworks
- The City owns nearly 700 water meters that measure water use and provide basic data used for utility billing. Water meters are very accurate when new, but their mechanical components are subject to wear and tear and tend to under report water usage as they age.
- The current water meters are 35+ years old
- The primary goals of the Water Meter Replacement Project, in addition to getting more accurate accounting of customer water use and create a more time-efficient method of reading meters, instead of staff walking in all elements of weather.
- The City has bonded for $210,003.15 for this project
- At this time, staff suggests the following project schedule
    - Approve Specs and Authorize Meter Bidding: January 27
    - Award Meter Purchase/Delivery Bid: February 24
    - Municipal Code Changes (as required)
    - Authorize Service Agreement for Installation: March 10
    - Water Meter Replacements: March and April

**ATTACHMENTS**

Attached on page(s) 62 through 74 for the bids and analysis.

PROPOSAL FORM

PROJECT: WATER METER REPLACEMENT

MAPLE PLAIN, MN

THIS BID IS SUBMITTED TO:

CITY OF MAPLE PLAIN
1620 MAPLE AVENUE
PO BOX 97
MAPLE PLAIN, MN 55359

The undersigned, being familiar with local conditions, having made all field investigations and factors affecting the work does hereby propose to furnish all labor, materials, equipment, tools skills and all else necessary to complete the following in accordance with plans of either Option A or Option B.

Total Bid of: $181,472.50

METERING & TECHNOLOGY SOLUTIONS Bidder

I hereby certify that I have reviewed the Affirmative action requirements as set forth in the Advertisement for Bids and Specifications and declare the following (check one):

XX We have fewer than 20 full-time employees therefore we are exempt from the Affirmative action requirements

_____We have attached a certified copy of our Affirmative Action Certification, or

_____We do not have an Affirmative Action Certification

The City of Maple Plain reserves the right to reject any and all bids to waive minor irregularities and informalities therein and award the contract in the best interest of the City.

By signing this proposal, I hereby acknowledge such a contract with the City of Maple Plain upon approval of and signing by the City, and agree to adhere to plans and specifications attached.

**METERING AND TECHNOLOGY SOLUTIONS**

Badger Meter
Authorized Distributor

# CITY OF MAPLE PLAIN

OPTION "B" POSITIVE DISPLACEMENT METERS/DRIVE BY RADIO SYSTEM

| DESCRIPTION | QUANTITY | UNIT PRICE | TOTAL |
|---|---|---|---|
| Reading Device, Management Software | 1 | $7,995.00 | $7,995.00 |
| On-Site Training | | $0.00 | $0.00 |
| Annual Software/Hardware Upgrade (after first year) | | $1,200.00 | $1,200.00 |
| **RESIDENTIAL METERS** | | | |
| 5/8" X 3/4" Badger Model 25 bronze disc meter with encoder and integral ORION radio | 600 | $156.25 | $93,750.00 |
| Transmitter (included in above price) | 600 | N/A | N/A |
| 1" Badger Model 55 bronze disc meter with encoder and integral ORION radio | 10 | $222.50 | $2,225.00 |
| 1 1/2" Badger Model 120 flanged disc meter with encoder and integral ORION radio | 10 | $443.75 | $4,437.50 |
| **COMMERCIAL METERS - DISC** | | | |
| 1 1/2" Badger Model 120 flanged disc meter with encoder and integral ORION radio | 22 | $443.75 | $9,762.50 |
| 2" Badger Model 170 flanged disc meter with encoder and integral ORION radio | 29 | $625.00 | $18,125.00 |
| **COMMERCIAL METERS - TURBINE** | | | |
| 1 1/2" Badger Model T-160 flanged Turbine meter with encoder and integral ORION radio | Any | $700.00 | |
| 2" Badger Model T-200 flanged Turbine meter with encoder and integral ORION radio | Any | $762.50 | |
| 3" Badger Model T-450 flanged Turbine meter with encoder and integral ORION radio | 1 | $887.50 | $887.50 |
| 4" Badger Model T-1000 flanged Turbine meter with encoder and integral ORION radio | 1 | $1,325.00 | $1,325.00 |
| **COMMERCIAL METERS - COMPOUND** | | | |
| 2" Badger Compound Series meter with (2) encoders and (2) ORION radio | Any | $1,712.50 | |
| 3" Badger Compound Series meter with (2) encoders and (2) ORION radio | Any | $2,025.00 | |
| 4" Badger Compound Series meter with (2) encoders and (2) ORION radio | Any | $3,150.00 | |
| METER INSTALLATION | | | |
| Residential Meter Installation, 5/8 x 3/4" - 1" | 620 | $57.00 | $35,340.00 |
| Commercial Meter Installation - 1 1/2" meter | 22 | $100.00 | $2,200.00 |
| Commercial Meter Installation - 2" meter | 29 | $125.00 | $3,625.00 |
| Commercial Meter Installation - 3" meter | 1 | $250.00 | $250.00 |
| Commercial Meter Installation - 4" Meter | 1 | $350.00 | $350.00 |
| | | **Grand Total** | **$181,472.50** |

P.O. Box 22088
Eagan, MN 55122
www.metertechsolutions.com

Office: 952.242.1960
Toll Free: 1.877.398.0450
Fax: 952.882.6350

PROPOSAL FORM

PROJECT: WATER METER REPLACEMENT

MAPLE PLAIN, MN

THIS BID IS SUBMITTED TO:

CITY OF MAPLE PLAIN
1620 MAPLE AVENUE
PO BOX 97
MAPLE PLAIN, MN 55359

The undersigned, being familiar with local conditions, having made all field investigations and factors affecting the work does hereby propose to furnish all labor, materials, equipment, tools skills and all else necessary to complete the following in accordance with plans of either Option A or Option B.

Total Bid of: $ 212,064.00

Dakota Supply Group, Inc. Bidder

I hereby certify that I have reviewed the Affirmative action requirements as set forth in the Advertisement for Bids and Specifications and declare the following (check one):

_____We have fewer than 20 full-time employees therefore we are exempt from the Affirmative action requirements

✓ We have attached a certified copy of our Affirmative Action Certification, or

_____We do not have an Affirmative Action Certification

The City of Maple Plain reserves the right to reject any and all bids to waive minor irregularities and informalities therein and award the contract in the best interest of the City.

By signing this proposal, I hereby acknowledge such a contract with the City of Maple Plain upon approval of and signing by the City, and agree to adhere to plans and specifications attached.

Johnathan Bradley

763-442-5498

| INSTALLATION | QTY | PRICING | TOTAL |
|---|---|---|---|
| RESIDENTIAL METER INSTALLATION | 620 | $ 58.00 | $ 35,960.00 |
| COMMERCIAL METER INSTALLATION | 120 | $ 86.00 | $ 10,320.00 |

X 600
100

PROPOSALS FOR WATER METER PROJECT FOR THE CITY OF MAPLE PLAIN

PRODUCT

| ITEM | QTY | PRICE/ITEM | TOTAL |
|---|---|---|---|
| Reading Device, Management Software | 1 | $4,500.00 | $4,500.00 |
| On-Site Training | 1 | $1,000.00 | $1,000.00 |
| Annual Software/Hardware Upgrades | 1 | $900.00 | $900.00 (purchase year 2) |
| Fixed Mounted Infrastructure, if Option A | Ø | NA | NA |

Turbine

| RESIDENTIAL METERS | | PRICE | TOTAL |
|---|---|---|---|
| 5/8" Meter | 600 | NA | NA |
| Transitter | 600 | NA | NA |
| 1" Meter | 10 | NA | NA |
| 1-1/2" Meter | 10 | NA | NA |

Compound

| RESIDENTIAL METERS | | PRICE | TOTAL |
|---|---|---|---|
| 5/8" Meter | 600 | NA | NA |
| Transitter | 600 | NA | NA |
| 1" Meter | 10 | NA | NA |
| 1-1/2" Meter | 10 | NA | NA |

Disk

| RESIDENTIAL METERS | | PRICE | TOTAL |
|---|---|---|---|
| 5/8" Meter | 600 | $104.50 | $62,700.00 |
| Transitter | 600 | $69.00 | $41,400.00 |

| | | | |
|---|---|---|---|
| 1" Meter with Translator | 10 | $ 289.00 | $ 2,890.00 |
| 1-1/2" Meter with Translator | 10 | $ 497.00 | $ 4,970.00 |

| COMMERCIAL METERS | QTY | TURBINE/UNIT | TOTAL |
|---|---|---|---|
| Residential 5/8" | 40 | NA | NA |
| Residential 1" | 27 | NA | NA |
| Residential 1-1/2" | 22 | NA | NA |
| Commercial 2" | 29 | NA | NA |
| Commercial 3" | 1 | $ 1,292.00 | $ 1,292.00 |
| Commercial 4" | 1 | $ 1,721.00 | $ 1,721.00 |

| COMMERCIAL METERS | QTY | COMPOUND/UNIT | TOTAL |
|---|---|---|---|
| Residential 5/8" | 40 | NA | NA |
| Residential 1" | 27 | NA | NA |
| Residential 1-1/2" | 22 | NA | NA |
| Commercial 2" | 29 | NA | NA |
| Commercial 3" | 1 | NA | NA |
| Commercial 4" | 1 | NA | NA |

| COMMERCIAL METERS | QTY | DISK/UNIT | TOTAL |
|---|---|---|---|
| Residential 5/8" | 40 | $ 173.50 | $ 6,940.00 |
| Residential 1" | 27 | $ 289.00 | $ 7,803.00 |
| Residential 1-1/2" | 22 | $ 497.00 | $ 10,934.00 |
| Commercial 2" | 29 | $ 646.00 | $ 18,734.00 |
| Commercial 3" | 1 | NA | NA |
| Commercial 4" | 1 | NA | NA |

If Bidder is:

An Individual

BY: _____

Doing Business As: _____

Telephone: _____

A Partnership

By: _____

Business Address: _____

_____

Telephone: _____

A Corporation

By: Dakota Supply Group, Inc.

State of Incorporation: North Dakota

By: Jonathan Bradley

Title: Branch Manager

Business Address: 12205 Nicollet Ave S

Burnsville, MN 55337

Telephone: 952-890-3811

Sinature: [signature]

Firm Name: Dakota Supply Group, Inc

Date: 2/16/14

PROPOSAL FORM

PROJECT: WATER METER REPLACEMENT

MAPLE PLAIN, MN

THIS BID IS SUBMITTED TO: CITY OF MAPLE PLAIN
1620 MAPLE AVENUE
PO BOX 97
MAPLE PLAIN, MN 55359

The undersigned, being familiar with local conditions, having made all field investigations and factors affecting the work does hereby propose to furnish all labor, materials, equipment, tools skills and all else necessary to complete the following in accordance with plans of either Option A or Option B.

Total Bid of: $282,316.56

HD Supply Waterworks LTD
Bidder

I hereby certify that I have reviewed the Affirmative action requirements as set forth in the Advertisement for Bids and Specifications and declare the following (check one):

_____We have fewer than 20 full-time employees therefore we are exempt from the Affirmative action requirements

✓ We have attached a certified copy of our Affirmative Action Certification, or

_____We do not have an Affirmative Action Certification

The City of Maple Plain reserves the right to reject any and all bids to waive minor irregularities and informalities therein and award the contract in the best interest of the City.

By signing this proposal, I hereby acknowledge such a contract with the City of Maple Plain upon approval of and signing by the City, and agree to adhere to plans and specifications attached.

| DESCRIPTION | QTY | UNIT | Unit Price | Extended |
|---|---|---|---|---|
| AR5501RF Handheld, 5005 Stand,GPS, Command Link,& Autoread NA2W software | 1 | EA | $ 5,658.09 | $ 5,658.09 |
| On Site Training | 1 | EA | $ 1,500.00 | $ 1,500.00 |
| Annual Software Support - First Year | 1 | EA | $ 1,732.50 | $ 1,732.50 |
| 510M SmartPoint single port - 3 wire | 740 | EA | $ 113.16 | $ 83,739.71 |
| 5/8" x 3/4" Iperl Water Meter | 640 | EA | $ 110.40 | $ 70,653.18 |
| 1" Iperl Water Meter | 37 | EA | $ 161.85 | $ 5,988.32 |
| 1 1/2" C2 Omni Water Meter | 32 | EA | $ 964.54 | $ 30,865.30 |
| 2" C2 Omni Water Meter | 29 | EA | $ 1,112.93 | $ 32,275.07 |
| 3" C2 Omni Water Meter | 1 | EA | $ 1,409.72 | $ 1,409.72 |
| 4" C2 Omni Water Meter | 1 | EA | $ 2,461.03 | $ 2,461.03 |
| Residential Installation - 5/8" - 1" | 677 | EA | $ 56.70 | $ 38,386.60 |
| Commercial Installation - 1 1/2" | 32 | EA | $ 111.76 | $ 3,576.47 |
| Commercial Installation - 2" | 29 | EA | $ 135.29 | $ 3,923.53 |
| Commercial Installation - 3" | 1 | EA | $ 264.71 | $ 264.71 |
| Commercial Installation - 4" | 1 | EA | $ 382.35 | $ 382.35 |
| **Optional Equipment** | | | | |
| VGB Package w/laptop and Software | | EA | $ 18,860.29 | $ - |
| Mapping Module - Optional | | EA | $ 6,286.76 | $ - |
| | | | | **$ 282,816.56** |

## NOTES:

City to send out letters to residence requesting appointment for installation.

If addition work is required for meter installation, the following rates apply.

| | | |
|---|---|---|
| Installation of up to ¾ inch valves including valve | $ | 58.00 res |
| Installation of 1 inch valves | $ | 65.00 com |
| Freezing of pipe for various installations | $ | 100.00 |
| Plumber rate for extraordinary installation (labor only) | $ | 95.00 |
| **Meter Flange Kits as required** | | |
| 1 1/2" Flange Kit | $ | 16.50 |
| 2" Flange Kit | $ | 17.75 |
| 3" Flange kit | $ | 32.00 |
| 4" Flange Kit | $ | 38.00 |

**{Enter Contractor's name in blanks unless otherwise indicated}**

**AFFIRMATIVE ACTION/EQUAL EMPLOYMENT OPPORTUNITY (AA/EEO) POLICY STATEMENT**

This statement is to affirm HD Supply Waterworks policy on providing Equal Employment Opportunity (EEO) to all employees and applicants for employment in accordance with all applicable Equal Employment Opportunity Affirmative Action laws, directives and regulations of Federal, State and Local governing bodies or agencies thereof, specifically including Section 183.04 of the Saint Paul Legislative Code (Human Rights Ordinance) and the Rules Governing Affirmative Requirements in Employment.

HD Supply Waterworks will not discriminate against any employee or applicant for employment because of race, creed, religion, sex, sexual or affectional orientation, color, national origin, ancestry, familial status, age, disability, marital status or status with regard to public assistance.

HD Supply Waterworks will maintain zero tolerance for harassment of or by any employee or applicant for employment because of race, creed, religion, sex, sexual or affectional orientation, color, national origin, ancestry, familial status, age, disability, marital status or status with regard to public assistance, will maintain an internal complaint procedure for complaints of such harassment, and will provide employees with contact information for federal, state and local enforcement agencies.

HD Supply Waterworks will take Affirmative Action (AA) to ensure that all employment practices are free of such discrimination and harassment. Such employment practices include, but are not limited to, the following: hiring, upgrading, demotion, transfer, recruitment or recruitment advertising, selection, layoff, disciplinary action, termination, rates of pay or other forms of compensation, and selection for training, including apprenticeship.

HD Supply Waterworks fully supports incorporation of non-discrimination and affirmative action rules and regulations into contracts.

HD Supply Waterworks will commit the necessary time and resources, both financial and human, to achieve the goals of Equal Employment Opportunity and Affirmative Action.

HD Supply Waterworks will evaluate the performance of its management and supervisory personnel on the basis of their involvement in achieving these Equal Employment Opportunity and Affirmative Action objectives as well as other established criteria. Any employee of HD Supply Waterworks or subcontractors to HD Supply Waterworks who do not comply with the Equal Employment Opportunity and Affirmative Action (EEO/AA) Policies and Procedures set forth in this Statement and plan will be subject to disciplinary action. Any subcontractor not complying with all applicable Equal Employment Opportunity/Affirmative Action laws, directives and regulations of the Federal, State and Local governing bodies or agencies thereof, specifically including Section 183.04 of the Saint Paul Legislative Code and the Rules Governing Affirmative Requirements in Employment, will be subject to appropriate legal sanctions.

HD Supply Waterworks has appointed Michelle James-Mickens as EEO/AA Manager to manage the Equal Employment Opportunity Program. His/Her responsibilities will include monitoring all Equal Employment Opportunity activities and reporting the effectiveness of this Affirmative Action Plan (AAP), as required by Federal, State and Local agencies. He/she will be given the necessary top management support and staffing to fulfill his/her job duties. The Chief Executive Officer of HD Supply Waterworks will receive and review reports on the progress of the plan. If any employee or applicant for employment believes he/she has been discriminated against, please contact Michelle James Mickens at 3100 Cumberland Blvd. Atlanta, GA, or call 770-852-9273.

Chief Executive Officer (Please print)

Signature of Chief Executive Officer

1/28/08
Date

If Bidder is:

An Individual

BY: _____

Doing Business As: _____

Telephone: _____

A Partnership

By: HD Supply WATERWORKS, LTD

Business Address: 15800 W. 79TH STREET

EDEN PRAIRIE, MN 55344

Telephone: 952-937-9666

A Corporation

By: _____

State of Incorporation: _____

By: _____

Title: _____

Business Address: _____

_____

Telephone: _____

Sinature: Thomas J. Ogei

Firm Name: HD Supply WATERWORKS, LTD.

Date: 2/18/14

| Description | Metering and Technology Solutions | Dakota Supply Group | HD Supply Waterworks |
|---|---|---|---|
| Software | $7,995.00 | $4,500.00 | $5,685.09 |
| Onsite Training | $0.00 | $1,000.00 | $1,500.00 |
| Annual Software Upgrade | $1,200.00 | $900.00 | $1,732.50 |
| 510M SmartPoint Sing Port (740) | | | $83,739.71 |
| Residential 5/8" (600) | $93,750.00 | $104,100.00 | $66,240.00 |
| Residential 1" (10) | $2,225.00 | $2,890.00 | $1,618.50 |
| Residential 1.5" (10) | $4,437.50 | $4,970.00 | $9,645.40 |
| Commercial Disc 1.5" (22) | $9,762.00 | $10,934.00 | $21,219.88 |
| Commercial Disc 2" (29) | $18,125.00 | $19,734.00 | $32,275.07 |
| Commerical Turbine 3: (1) | $887.50 | $1,292.00 | $1,409.72 |
| Commerical Turbine 4" (1) | $1,325.00 | $1,721.00 | $2,461.03 |
| Commerical Disk 5/8 (40) | $6,250.00 | $6,940.00 | $4,416.00 |
| Commerical Disk 1" (27) | $6,007.50 | $7,803.00 | $4,369.95 |
| **Total product** | **$151,964.50** | **$161,284.00** | **$236,312.85** |
| | | | |
| Installation | | | |
| Residential 5/8" -1" | $35,340.00 | $35,960.00 | $38,386.60 |
| Commerical 1.5" | $2,200.00 | | $3,576.47 |
| Commerical 2" | $3,625.00 | | $3,923.53 |
| Commerical 3" | $250.00 | | $264.71 |
| Commerical 4" | $350.00 | | $382.35 |
| Commerical 5/8" | $2,280.00 | | |
| Commerical 1" | $1,539.00 | $10,320.00 | |
| **Total Installation** | **$45,584.00** | **$46,280.00** | **$46,533.66** |
| | | | |
| **Total BID** | **$197,548.00** | **$207,564.00** | **$282,846.51** |
| | | | |
| **Options** | | | |
| BGB Packagae with laptop | | | $18,860.29 |
| Mapping Module | | | $6,286.76 |
| | | | |
| **Valve Replacement** | $58 x 600 =$ 34800 | $60 x 600 = $36,000 | $58 x 600 = $34,800 |
| | $100 x 100 = $10000 | $150 x 100 = $15,000 | $65 x100 = $6500 |

| | | | |
|---|---|---|---|
| | **$44,800.00** | **$51,000.00** | **$41,300.00** |
| Adjusted Total | **$242,348.00** | **$258,564.00** | **$324,146.00** |
| Total with Options | | | $349,282.00 |

Agenda Information Memorandum
February 24, 2014 Maple Plain Planning Commission

**10. NEW BUSINESS**
**C. PRELIMINARY AND FINAL PLAT APPROVAL REQUEST FOR 5030 HIGHWAY 12 SUBDIVISION.**

## ACTION TO BE CONSIDERED

To review a preliminary and final plat request for 5030 Highway 12 Subdivision. To receive a recommendation from the Planning Commission to approve the request with conditions.

## FACTS

- Applicants and Owners of the commercial property located at 5030 Highway 12 are asking that the City
  1. Approve a Preliminary Plat that approves a three (3) lot subdivision of the mentioned property.
  2. Approve a Final Plat that approved a three (3) lot subdivision of the mentioned property.
- The property is zoned Mixed-Use – Gateway.
- The total current acreage is 4.16 acres. The subdivision would create three parcels with the following acreage:
  1. Lot 1: 2.16 Acres
  2. Lot 2: 1.12 Acres
  3. Lot 3: .80 Acres
- There are currently two commercial buildings on site, of which would be separated into separate lots if approved.
- The subdivision would allow for the development of the land to the north of the property.
- This has been approved by the Planning Commission.

## ATTACHMENTS

Attached on page(s) 76 through 77 is a memo from City Planner, Mark Kaltsas, and other applicable information.

RESOLUTION NO. 14-0224-02

A RESOLUTION APPROVING THE PRELIMINARY AND FINAL PLAT OF THE K-BID ADDITION SUBMITTED BY RAY CARUSSO

WHEREAS, the City of Maple Plain (the "City) is a municipal corporation under the laws of Minnesota; and

WHEREAS, the City adopted a comprehensive plan in 2008 to guide the development of the community; and

WHEREAS, the City has adopted a zoning ordinance and other official controls to assist in implementing the comprehensive plan; and

WHEREAS, Ray Caruso (the "Applicant") submitted a preliminary and final plat for the property located at 5030 Highway 12 (the "Property"); and

WHEREAS, the Property is zoned Mixed Use – Gateway (MU-G); and

WHEREAS the requested preliminary and final plat and subdivision meets all requirements, standards and specifications of the City of Maple Plain zoning and subdivision ordinance for property zoned Mixed Use - Gateway; and

WHEREAS the Planning Commission held a public hearing on February 13, 2014 to review the application for preliminary and final plat, following mailed and published noticed as required by law; and

WHEREAS, the City Council has reviewed all materials submitted by the Applicant; considered the oral and written testimony offered by the applicant and all interested parties; and has now concluded that the application is in compliance with all applicable standards and can be considered for approval.

NOW, THEREFORE BE IT RESOLVED BY THE CITY COUNCIL OF THE CITY OF MAPLE PLAIN, MINNESOTA, that it should and hereby does approve the application by Ray Caruso for preliminary and final plat of the K-BID ADDITION subdivision per the City's subdivision and zoning regulations with the following conditions:

1. The proposed preliminary and final plats meet all applicable conditions, criteria and restrictions stated in the City of Maple Plain Subdivision and Zoning Ordinance.

2. City Council approval shall be subject to the applicant completing the following items:

a. The Applicant shall provide a revised survey indicating all easements for drainage and utilities as required by and in accordance with the City's subdivision ordinance for the newly created parcels.

b. The Applicant shall address all engineering comments as outlined in the engineering review memo from Stantec, dated January 30, 2014.

c. The Applicant shall provide the City with a copy of the proposed cross-access/cross parking agreement to be reviewed by the City's attorney.

3. The Applicant shall pay for all costs associated with the City's review of the preliminary and final plats.

4. The Applicant shall file the final plat with the county within six (6) months of approval.

This resolution was adopted by the City Council of the City of Maple Plain on this 24th day of February, 2014, by a vote of ____ayes and ____nays.

_____
Roger Hackbarth, Mayor

ATTEST:

_____
Tessia Melvin, City Administrator

(SEAL)

RES. NO.14-0224-02
Preliminary and Final Plat K-Bid Addition Subdivision