AGENDA
MAPLE PLAIN PLANNING COMMISSION
MAPLE PLAIN CITY HALL
Tuesday, October 21, 2014, AT 7 p.m.

1. **CALL TO ORDER**

2. **PLEDGE OF ALLEGIANCE**

3. **ADOPT AGENDA**

4. **CONSENT AGENDA**
   a. Minutes from October 2, 2014

5. **CONTINUATION OF DISCUSSION TO CONSIDER SITE PLAN REVIEW TO ALLOW A NEW LIQUOR BUSINESS TO OCCUPY THE EXISTING BUILDING AT 5030 HIGHWAY 12.**
6. **CONTINUATION OF DISCUSSION TO CONSIDER TEXT AMENDMENTS FOR THE FOLLOWING MAPLE PLAIN ORDINANCES**
   a. **TITLE IX, CHAPTER 92 ANIMALS, CONSIDERATION TO AMEND THE ORDINACE TO FURTHER DEFINE THE TOTAL NUMBER AND TYPE OF ANIMALS PERMITTED.**
   b. **TITLE XV, LAND USEAGE, CHAPTER 153.063 GENERAL FENCING, SCREENING, LANDSCAPING, AND STORAGE, CONSIDERATION TO AMEND THE ORDINANCE TO PROVIDE MORE DETAILS PERTAINING TO FENCING REQUIREMENTS AND FENCING PERMITS.**

7. **ADMINISTRATIVE REPORTS**
   a. **Update on Development Opportunities**

8. **OLD BUSINESS**

9. **NEW BUSINESS**

10. **COMMISSION REPORTS AND OTHER BUSINESS**

11. **VISITORS TO BE HEARD**
    Note: This is a courtesy extended to persons wishing to address the Commission who are not on the agenda. A completed public comment form should be presented to the City Administrator prior to the meeting. The presentation will be limited to 3 minutes. The session will be limited to 15 minutes.

12. **ADJOURN**

City of Maple Plain Planning Commission
Meeting Minutes
October 2, 2014
7 p.m.

1. CALL TO ORDER

Chair Bliss called the meeting to order at 7 p.m.
Present: Chair Michele Bliss and Commissioners John Fay, Stephen Shurson, Barb Rose and Mardelle DeCamp. Also in attendance were City Planner, Mark Kaltsas and City Administrator, Tessia Melvin.

Councilmember Liaison, Dave Eisinger arrived five minutes late.

2. PLEDGE OF ALLEGIANCE

3. ADOPT AGENDA

Commissioner DeCamp moved to adopt the Agenda; Commissioner Shurson seconded. Motion passed 5-0.

4. CONSENT AGENDA

A. Minutes from June 5, 2014 Meeting
B. Minutes from September 4, 2014 Meeting

Commissioner DeCamp moved to accept the June 5 and September 4 minutes with minor changes; Commissioner Fay seconded. Motion passed 5-0.

5. PUBLIC HEARING TO CONSIDER A SITE PLAN REVIEW, VARIANCE AND SUBDIVISION TO PERMIT A LOT COMBINATION FOR THE TWO PROPERTIES LOCATED AT 1675 SPRING AVENUE (PID NO. 24-118-24-0010 AND 24-18-24-33-0009)

The Public Hearing opened at 7:26 p.m.

City Planner Mark Kaltsas presented a staff report to the Commission. Kaltsas reminded the Commission that the applicant was at the September meeting with two proposed buildings for the site. After their discussion, the applicant has found another proposed building and prepared the site plan to include building

elevations to illustrate the intended improvements, colors and building materials for the new buildings. In addition, the site plan included an updated parking plan, landscaping plan and proposed setbacks.

The applicant Traci King was in attendance along with Carol King for questions. Kaltsas added that the former owner had proposed a site plan and lot combination, but that it did not go through the Planning Commission. King would like to relocate a dog grooming business from to Maple Plain from Minnetonka.

Kaltsas provided his staff report to the Commission. He noted that the combination of the two properties would prevent future development on the smaller lot and help the property owner by having one property PID.
He also noted that the applicant would bring a current building to the location. The new siding would be an earth-tone brown with purple accented shutters. The purple compliments the owner's business logo.

Kaltsas reported that the south side of the property currently has an opaque fence, which the applicant will leave. The neighbor of the adjoining property was concerned that the fence would be removed and his property would look directly at the business.

Kaltsas noted that the applicant is looking for a variance for the parking lot. Currently the City Code suggests that properties along Highway 12 should have a 50 ft setback, unless it hinders that business. If the setback hinders the business, the owner should apply for a variance.

Kaltsas noted that the parking lot plan did not include lighting, but that staff would suggest that lighting be included in the report to the City Council. The current landscaping plan includes three sides of landscaping. Kaltsas added that staff recommends some landscaping between the building and the residence even though a fence does exist.

Carol King, added that this location is not in the downtown area and is difficult for customers to access as it does not have Highway 12 access. In addition, it is a very small lot for a business, so she asked the Planning Commission to consider this when they review the plan.

Chair Bliss asked about a second floor to the building and if MnDot agreed with the variance for the parking lot. City Administrator Melvin, added that the current 50 ft setback is a City ordinance and not a MnDot mandate. Kaltsas responded that the proposed building does not have a second floor and all of the specs currently meet the fenestration percentages.

Commissioner Shurson asked about the parking lot and if it would provide sufficient parking and meet the City's Code. Kaltsas responded that the due to the cul-de-sac, there are not many options for the parking lot, but it does meet the City's code and the cul-de-sac also allows for on-street parking. Kaltsas added that the business is not intended to have customers parked for a long period of time as customers are generally dropping off or picking up.

Commissioner Fay added that he has no problem with the variance or the lot combination, but he is concerned about the proposed site plan. He stated that it appears that the applicant is pulling a commercial building into a residential area. In his interpretation of the Design Guidelines, he does not believe that the intent of the guidelines is to provide another home that business is done out of. He believes that it should look like a business.

Commissioner Shurson concurred with Fay and added that he is not comfortable with the architectural designs presented.

Commissioner DeCamp asked what will grow in window boxes on the east side of the building. Carol King replied that they have flowers that will grow in shade and sun. King added that this location is not the downtown area, but a transitional area. It is where the downtown begins, but also includes residences.

Commissioner Rose added that she believed the plan was a great fit for the two properties. She stated that it cleans up the area, provides a new business to Maple Plain and adds charm to the neighborhood. Commissioner Fay followed up that the intent of the Comprehensive Plan is to create vision for the future of Maple Plain and the Design Guidelines were created to achieve this vision. Traci King commented that this is a good transition for the City. The current lot has been vacant since 2006 and it is an improvement to the area. She added that this property would be hard to develop for any business because of its location, the lot size and the lack of Highway 12 accessibility.

In response to the wood siding by several Commissioners, Melvin commented that McGarry's is all wood, and this would be similar. The City's intent is to create a future, while welcoming businesses.

Julie Maas-Kusske, resident of Maple Plain, added that she believes the site plan looks great. She added that it should look like a home, as it sits in a residential neighborhood. She also commented that it is a great improvement to the area.

The Public Hearing Closed at 8 p.m.

Chair Bliss asked for a vote. Commissioner Shurson asked if the three items could be separated when voted.

Commissioner Fay moved to accept the variance and the subdivision to permit a lot combination for the two properties located at 1675 Spring Avenue; seconded by Commissioner Shurson. Motion passed 5-0.

Commissioner DeCamp moved to accept the site plan review; seconded by Commissioner Rose. Motion passed 3-2, with Commissioners Fay and Shurson voting against the site plan approval.

6. PUBLIC HEARING TO CONSIDER SITE PLAN REVIEW TO ALLOW A NEW LIQUOR BUSINESS TO OCCUPY THE EXISTING BUILDING AT 5030 HIGHWAY 12.

The Public Hearing opened at 8:30 p.m.

The public hearing was continued at 8:45 p.m. as the applicant was not in the audience and the Planning Commission had several questions for the applicant.

Kaltsas provided a report on the current site plan. The current applicant is seeking site plan approval for a 7,000 square foot building, which 5,000 square feet would be utilized as a liquor store and the additional 2,000 square feet would be occupied with a leased tenant, which has not been determined to date. Melvin noted that the applicant was not present.

Kaltsas reported that the applicant plans to improve the exterior by making the following improvements:

1. Painting the entire building using colors found in the Design Guidelines. Staff has met with the applicant and suggested using earth tones.
2. Adding stucco columns and additional windows/doors to the front façade of the building.
3. Adding additional windows to the east elevation at the southeast corner of the building. These would not be done until the leased tenant is determined, so that the fenestration meets their needs.
4. Resurfacing the wooden overhang with EIFS (similar to stucco) to modernize the appearance. In addition, the applicant is proposing some canopy accents along the front façade.

Kaltsas reported on the architectural design being proposed by the applicant:
The front façade will include:
40% windows/openings (39% is being proposed)
25% brick/stone/hardie board (28% is being proposed)

10% other materials (12% is being proposed)

Other building sides:
15% windows/openings (8% on east elevation)
50% brick/stone/hardie board (82% on east elevation)
10% other materials (4% on east elevation)

Kaltsas also reported that the applicant is proposing to make improvements to the site which will address parking, a trash enclosure and landscaping. The applicant is proposing 28 parking spaces for the property. In addition, the applicant is proposing to screen the north property line from the potential adjacent residential development. Kaltsas added that the existing gravel areas would be removed and grass planted.

Commissioner DeCamp asked if the City needed another liquor store. The Commission commented on this. Melvin stated that the City Council can determine the amount of liquor stores in town, and while they understood two already existed, this was approved by a 5-0 vote. Melvin commented that the Council appreciated the amount of money being spent on this project to bring it up to Design Guidelines. Melvin added that the liquor license is dependent upon the approval of the site plan and the Design Guidelines.

Chair Bliss asked about the signage for business. Commissioner Shurson added that UFC brought the sign permit along with the site plan. Kaltsas added that they will have to complete a sign permit and meet the City Code.

Commissioner Shurson asked questions about the landscaping plan. He was concerned about the landscaping in front of the building and suggested not screening the parking lot. In addition, he asked that the applicant provide more of a variety of trees. Commissioner Shurson commented on the selected trees that they are short and skinny, which may not create the best screening.

Kaltsas reported that staff has met with the applicant and his architect twice to help them understand the Design Guidelines. He added that landscape for the parking lot is not included in the Design Guidelines because it is under 40 stalls. He also added that streetscaping in the Design Guidelines are different for properties along Highway 12.

Councilmemer Eisinger asked if some of the gravel could remain, and topsoil placed on top of it to allow fire trucks better access.

Commissioner Rose asked why work was being done inside without the site plan approval. Melvin responded that they pulled a building permit to begin the work and that the site plan approval needs to occur in order for the liquor license to be approved by the City Council.

Commissioner Rose asked what color the brick was as it was not clear in the plan. Commissioner Shurson added that the Commission would need to see the color of the overhang. Commissioner DeCamp concluded that the building is old and there is only so much that can be done with an old building.

Melvin added that the Council brought up the need to have decorative lighting at their Council meeting. Commissioner Fay asked that the Commission table this item until another meeting, as the applicant is not here to answer questions. The Commission discussed and agreed to meet on Tuesday, October 21 at 7 p.m.

Chair Bliss asked staff to provide the following recommendations to the applicant.

- Color samples
- Column details
- Landscaping plan
- Lighting plan

Commissioner Shurson moved to table the Site Plan Review; seconded by Commissioner Rose. Motion passed 5-0.

7. PUBLIC HEARING TO CONSIDER TEXT AMENDMENTS FOR THE FOLLOWING MAPLE PLAIN ORDIANANCES:

a. Title IX, Chapter 92: Animals, Consideration to amend the ordinance to further define the total number permitted and the type of animals permitted.

b. Title XV, Land Usage Chapter 153.063: General Fencing, Screening, Landscaping, and Storage, Consideration to amend the ordinance to provide more details pertaining to fencing requirements and fencing permits.

The public hearing to discuss Text Amendments was opened at 9:36 p.m. No comments were received. The Commission agreed to continue discussion at the next Planning Commission meeting.

8. ADMINISTRATIVE REPORTS

No Administrative Reports updates were provided.

9. OLD BUSINESS

The only item that was to be discussed was scheduling a workshop. This item was not discussed, but due to workload will get rescheduled to December.

10. NEW BUSINESS

No new business was discussed.

11. COMMISION REPORTS AND OTHER BUSINESS

It was discussed by the Commission to hold another Planning Commission meeting for Tuesday, October 21, to continue to discuss topics from tonight's meeting. In addition, the Commission asked that the applicants be present. It was agreed to have a meeting on Tuesday, October 21, at 7 p.m.

12. VISITORS TO BE HEARD

Note: this is a courtesy extended to persons wishing to address the Commission who are not on the agenda. A completed public comment form should be presented to the City Administrator prior to the meeting. The presentation will be limited to 3 minutes. The session will be limited to 15 minutes.

There were no visitors to be heard.

12. ADJOURNMENT

Commissioner Rose moved to adjourn the meeting at 9:38 p.m.; Commissioner Fay seconded. Motion passed 5-0.

City of Maple Plain

Request by Schumacher Properties for Site Plan Review to Allow Retail Use of the Existing Building Located on the Property at 5030 Highway 12

To:	Planning Commission
From:	Mark Kaltsas, City Planner
Meeting Date:	October 21, 2014
Applicant:	Schumacher Properties
Owner:	Schumacher Properties
Location:	5030 Highway 12

Update:

Staff met with the applicants to review the comments made by the Planning Commission. A second review letter was prepared which further detailed the comments and questions discussed at the Planning Commission Meeting (see attached). A brief summary indicating how the revised plans address the comments made by the City is provided below.

1. The Planning Commission would like to verify all of the proposed colors for the building. Commissioners also wanted to confirm that the existing brick on the south elevation of the building would remain unpainted? Please provide the City with color samples and additional detail on the building elevations delineating the intended colors and materials.

   The applicant has stated that they will bring/provide samples for the Planning Commission Meeting. The revised building elevations plans now specify the actual colors for each elevation and building material.

2. The proposed columns appear to provide some additional architectural relief to the south building elevation. The Planning Commission would like to see the base of the columns enlarged and constructed out of a masonry material rather than EIFS (i.e. a matching brick).

The applicant has proposed to use a stone base rather than the EIFS as previously proposed. The columns appear to be the same dimensions as those originally proposed. The applicant has provided a proposed dimension for the columns (24" in width). The size of the column bases may appears to align with the edge of the existing overhang.

3. Commissioners would like to see a revised landscape plan which provides additional landscaping along the Highway 12 frontage. The landscaping should provide a layered planting scheme and can be clustered to provide additional interest. The landscaping proposed along the north property line should provide a higher level of opacity than is currently proposed. Please reconsider the proposed species and spacing. Staff can provide additional direction relating to the landscaping. Please provide the City with a revised landscape plan which addresses the comments.

   The applicant has proposed additional plants along both the south and north property lines. While the additional planting appears to be more consistent with the architectural guidelines and discussion, it is recommended that the applicant consider preparing a separate and more detailed landscape plan for the two property borders.

4. The existing site does not have any existing parking lot lighting. In order to light the parking lot and provide lighting for the retail use of this building, a lighting plan will be required. It is anticipated that you will need to provide light poles along the south edge of the parking lot to adequately light the parking lot in accordance with the City's standards. The City has a standard light pole and fixture that should be used in order to meet the design guidelines. The lighting plan should also include any building lighting. Please provide the City with a lighting plan which includes a photometric plan.

   The applicant has hired an electrician and lighting manufacturer to prepare a lighting and photometric plan for this site. At the time of this writing staff had not received the plans. It is anticipated that the plans will be completed prior to the Planning Commission Meeting and will be forwarded as soon as they are received by the City.

5. The Fire Department has requested that you identify the location of the fire department connection on the building. The Fire Department would like the FDC to be located in the southwest corner of the building on the south elevation.

Staff is working with the applicant to address the issues relating to sprinkling of the building.

6. The Fire Department would like a portion of the existing gravel located on the east and north sides to remain in place to provide support for trucks driving around the building. The Fire Department recommended adding several inches of topsoil and seeding the areas over the top of the existing gravel so that the site would have the desired appearance.

   The applicant does not appear to address this comment on the revised plans. During the meeting with the applicant it was determined that a gravel surface should be left around the perimeter of the building without grass to reduce potential maintenance issues. Landscaping (grass) would be installed around the site perimeter (approximately a 5 foot planting strip) to define the site edge and provide some relief from the amount of impervious surface. This item will need to be shown on a revised site plan.

7. The Fire Department noted that the building will likely need to be sprinkled in order to meet the current building codes. Please review the building and provide the City with a code analysis which looks at this issue. If the building does require a sprinkler, please verify the size of the existing water service.

   Staff is working with the applicant to address the issues relating to sprinkling of the building.

8. The trash enclosure detail will need to be provided which identifies the structure and proposed buildings materials. The enclosure should be located such that the fire department can access the north side of the building with its vehicles.

   The applicant moved the proposed trash enclosure away from the building and provided a detail for review by the City. The applicant is proposing to construct a masonry block enclosure that would be painted to match the building.

9. The Commission did discuss the intended signage for the building and wanted it noted that any signage in the downtown mixed use district would be required to meet the design guidelines and be reviewed by the City.

   Staff discussed the sign requirements with the applicant and provided a summary of the permitted signage. The applicant will be preparing a sign package for the future review and approval of the City.

Request:

Schumacher Properties, (Owner/Applicant) requests that the City consider the following action for the property located at 5030 Highway 12 (PID No. 25-118-24-12-0070).

a. Site Plan Review to allow a new liquor business to occupy the existing building.

Property/Site Information:

The property is located just east of Boundary Avenue along the north side of Highway 12. The subject property is accessed via Boundary or Howard Avenues off of Highway 12. There is a cross access/parking agreement between the adjacent K-Bid property and the subject property. There is not a formal cross access agreement with the adjacent bank property; however, the parking areas allow access between the two properties. The property/building is currently vacant. The property has the following characteristics:

Property Information: **5030 Highway 12**
Zoning: *MU-G Mixed Use - Gateway*
Comprehensive Plan: *Mixed Use*
Acreage: 0.*80 Acres*

Discussion:
The applicant is seeking site plan review to allow a new business to occupy the existing property and building. The subject property was recently subdivided from the adjacent K-Bid property to the west and north. The subdivision split the overall property into three separate parcels. A portion of the property was utilized for the Meadows of Maple Plain subdivision. The subject property is currently vacant. The existing building is approximately 7,000 SF.

The applicant is proposing to renovate the entire building to accommodate retail uses. Approximately 5,000 SF will be renovated for use as an off-sale liquor store. The remaining 2,000 SF will be marketed for use as retail. The applicant does not currently have a tenant for this space. The renovations to the building include exterior improvements to enhance the aesthetic appearance of the building and bring it closer to meeting the intent of the design guidelines. The existing building is comprised of a brick front façade with masonry block on the side and rear elevations. There is a wooden overhang along the Highway 12 frontage.

The applicant is proposing to enhance the appearance of the building by making the following improvements:

1. Painting the entire building using colors found in the design guidelines. Staff has noted that the applicant should try to use earth tones as suggested in the design guidelines.

2. Adding stucco columns and additional windows/doors to the front façade of the building.

3. Adding additional windows to the east elevation at the southeast corner of the building. The proposed windows at this location will be installed at the time that the additional retail space is rented. This would allow the coordination of the window location with the interior improvements of this space.

4. Resurfacing the wooden overhang with EIFS (similar to stucco) to modernize the appearance. In addition, the applicant is proposing to provide some canopy accents along the front façade.

The applicant has provided colored building elevations to further illustrate their proposed changes. The applicant is not proposing to add any additional windows or openings to the north and west elevations. The north elevation is screened from view by an existing berm along the property line. In order to enhance this screening, the applicant is proposing to add additional evergreen landscaping to the north property line. The west elevation faces the adjacent K-Bid building and has little visibility. The City's architectural design guidelines stipulate the desired percentage of building materials for this zoning district as follows:

i. Front Façade:
   40% windows/openings (39% proposed)
   25% brick/stone/hardie board (28% proposed)
   10% other materials (12% proposed)

ii. Other Building Sides:
15% windows/openings (8% on east elevation)
50% brick/stone/hardie board (82% on east elevation)
10% other materials (4% on east elevation)

The applicant is proposing to make improvements to the site which will address parking, a trash enclosure and landscaping. The applicant is proposing to stripe the existing asphalt area to define parking spaces for this building. The proposed striping will establish 28 parking spaces for the property. The applicant is proposing to screen the parking area from Highway 12 using a low evergreen hedge. The applicant is proposing to screen the north property line from the potential adjacent residential development using an evergreen planting. In addition to the north and south property line screening, the applicant is proposing to return a portion of the east and north sides of the property to lawn areas. The existing gravel areas would be removed and planted with grass. The applicant is proposing to locate the trash enclosure near the northwest corner of the building. The City should consider the proposed site plan and subsequent effects relating to evaluation criteria established in the City's ordinance.

153.045 INTENT AND PROCEDURE

(I) Evaluation criteria. The Planning Commission and City Council shall evaluate the effects of the proposed site plan. This review shall be based upon, but not be limited to, compliance with the City Comprehensive Plan, provisions of this chapter (Design Guidelines and City Engineering Requirements).

Setbacks:

Minimum Lot Size: 6,000 square feet
Minimum Lot Width: 100 feet
Front Yard Setback: 5-10 feet
Highway 12 Setback from R.O.W.: 50 feet
Side Yard: 10 feet
Corner Side Yard: 20 feet
Rear Yard: 20 feet
Parking Setback Highway 12: 50 feet

The building and parking areas currently exist on this site. The applicant is proposing to remove a portion of the impervious surface to enhance the overall appearance of the site. The applicant is not proposing to make any changes to the site that would affect the setback requirements.

Parking Design:

Retail Area – 1 space per 250 sf (7,000 sf/ 250) = 28 spaces required
Total Number of Parking Spaces Required = 28
Total Number of Parking Spaces Provided = 28*
*This property has a cross-parking/cross-access agreement with the adjacent K-Bid site to the west.

Minimum Parking Space Width: 9 feet
Minimum Parking Space Length: 20 feet
Minimum Parking Aisle Width: 25 feet

The improved parking area already exists on this property. Only the north half of the parking area is currently striped. The applicant is proposing to stripe the entire asphalt area to delineate the proposed parking spaces. Following the re-striping of the parking area, the site will accommodate the intended use of the building. If the use of the building changes or intensifies in the future, the owner will be subject to additional review and approval by the City. An example of a use that would require additional review and approval would be a restaurant. The applicant is proposing to meet all applicable parking space design criteria established by the City.

Parking Lot Lighting:

Parking Lot lighting shall be arranged as to deflect light away from any adjoining residential zone or from the public streets. There is no existing lighting on this site and the applicant is not proposing any additional lighting. The City may want to request that the applicant install lighting as a part of the site improvements.

Landscaping:

The applicant is proposing to add landscaping along the north and south property lines. The intent of the landscaping is to screen the parking area from Highway 12 and to screen the north elevation from the adjacent future residential development. The City does not require any additional landscaping interior to the parking lot for lots with less than 40 parking spaces. The City could request that the applicant provide enhanced landscaping along the Highway 12 frontage.

Trash Enclosure:

The applicant is proposing to construct a trash enclosure at the northwest corner of the building. The trash enclosure will need to be constructed out of materials complementary to the principal structure. The applicant will need to provide the City with a detail of the proposed trash enclosure to ensure that it meets this requirement.

Storm Water Management, Grading and Drainage:

The City's Engineer has reviewed the proposed site plan and noted that there are no additional drainage and stormwater requirements resulting from the proposed improvements. The City's Engineer did note that any work proposed to be done in the MNDOT right of way will require a permit. The City will review the site grading once the gravel areas are removed to ensure that current drainage patterns are maintained.

Signage:

The applicant has not made an application for any signage at this point. All signage will need to be reviewed and approved by the City.

There are limited improvements required as a result of the applicant proposing to utilize the existing site and building. The proposed site plan generally meets the requirements established by the City. The City will need to review the proposed exterior building and site improvements to determine if they meet the intent of the City's design guidelines. The proposed parking lot striping, gravel removal and landscaping will improve the overall aesthetic quality of the site. The proposed use of the building for retail is permitted in this zoning district. The existing parking area can accommodate the use of the building as proposed. If the future use of the existing building changes or additional expansion of the site is proposed, additional review by the City may be required. This could result in additional improvements being required. It should be further noted that a restaurant would require an additional site plan review by the City to determine if it can be accommodated.

Neighbor Comments:

The City has not received any written or oral comments regarding the proposed site plan review.

Recommendation:

Staff is seeking a recommendation from the Planning Commission for the requested Site Plan Review. Should the Planning Commission make a positive recommendation to the City Council, it is recommended that the following findings and conditions be included:

1. The proposed site plan meets all applicable conditions, criteria and restrictions stated in the City of Maple Plain Zoning Ordinance.

2. Prior to the City Council's review of the site plan, the applicant shall complete the following items:

    a. The Applicant shall address all engineering comments made in the letter from Stantec, dated September 23, 2014 and that may arise as a result of their final grading of the site.

    b. The Applicant shall address all comments made by the Planning Commission relating to building architecture, color and materials.

    c. The applicant shall revise the site plan to address all comments made by the City's review letter dated October 3, 2014.

    d. The Applicant shall provide the City with a revised landscape plan.

    e. The Applicant shall provide the City with a lighting plan indicating the proposed locations of any lights for the building and parking area.

    f. The applicant shall address and satisfy all Fire Department comments relating to the building and site.

3. The Applicant shall pay for all costs associated with the City's review of the site plan review.

Attachments:

1. Property Pictures
2. Updated Site Plan
3. Updated Building Elevations
4. Trash Enclosure Details
5. Site Plan Review Letter (October 3, 2014)

View Looking North

View Looking South

Street View

MAPLE PLAIN
EST.1868 INC.1912
1620 MA
Ph: (763) 479-0515 | Fax: (763) 479-0519 | www.mapleplain.com

October 3, 2014

Sean Schumacher
Schumacher Properties
4355 State Highway 55
Loretto, MN 55357

Re: Site Plan Review – Liquor Depot

Dear Sean,

Your application for a Site Plan Review was reviewed by the Planning Commission on October 2, 2014. The Planning Commission tabled your request until October 21, 2014 at 7:00 pm in order for you to provide additional information. The Planning Commission has requested additional information from you pertaining to the proposed development of the property. In order for the Planning Commission to consider approval of the site plan review, please address the following comments and resubmit the plans to the City no later than October 15, 2014. Please address the following comments made by the Planning Commission.

The City offers the following comments for review:

1. The Planning Commission would like to verify all of the proposed colors for the building. Commissioners also wanted to confirm that the existing brick on the south elevation of the building would remain unpainted? Please provide the City with color samples and additional detail on the building elevations delineating the intended colors and materials.

2. The proposed columns appear to provide some additional architectural relief to the south building elevation. The Planning Commission would like to see the base of the columns enlarged and constructed out of a masonry material rather than EIFS (i.e. a matching brick).

3. Commissioners would like to see a revised landscape plan which provides additional landscaping along the Highway 12 frontage. The landscaping should provide a layered planting scheme and can be clustered to provide additional interest. The landscaping proposed along the north property line should provide a higher level of opacity than is currently proposed. Please reconsider the proposed species and spacing. Staff can provide additional direction relating to the landscaping. Please provide the City with a revised landscape plan which addresses the comments.

4. The existing site does not have any existing parking lot lighting. In order to light the parking lot and provide lighting for the retail use of this building, a lighting plan will be required. It is anticipated that you will need to provide light poles along the south edge of the parking lot to adequately light the parking lot in accordance with the City's standards. The City has a standard light pole and fixture that should be used in order to meet the design guidelines. The lighting plan should also include any building lighting. Please provide the City with a lighting plan which includes a photometric plan.

5. The Fire Department has requested that you identify the location of the fire department connection on the building. The Fire Department would like the FDC to be located in the southwest corner of the building on the south elevation.

6. The Fire Department would like a portion of the existing gravel located on the east and north sides to remain in place to provide support for trucks driving around the building. The Fire Department recommended adding several inches of topsoil and seeding the areas over the top of the existing gravel so that the site would have the desired appearance.

7. The Fire Department noted that the building will likely need to be sprinkled in order to meet the current building codes. Please review the building and provide the City with a code analysis which looks at this issue. If the building does require a sprinkler, please verify the size of the existing water service.

8. The trash enclosure detail will need to be provided which identifies the structure and proposed buildings materials. The enclosure should be

located such that the fire department can access the north side of the building with its vehicles.

9. The Commission did discuss the intended signage for the building and wanted it noted that any signage in the downtown mixed use district would be required to meet the design guidelines and be reviewed by the City.

Please let me know if you have any questions regarding any recommendations/comments or would like additional information. Please provide a revised set of plans addressing the concerns identified in this letter.

Sincerely,

Mark Kaltsas, PLA
City of Maple Plan

CC: Tessia Melvin, City Administrator
Dan Boyum, City Engineer

MATERIAL BREAKDOWN

FENESTRATION/WDWS: 39%
BRICK: 26%
EIFS/ALUMINUM: 12%

1 SOUTH ELEVATION
SCALE: 1/4" = 1'-0"

MATERIAL BREAKDOWN

FENESTRATION/WDWS: 8%
BRICK: 82%
EIFS/ALUMINUM: 4%

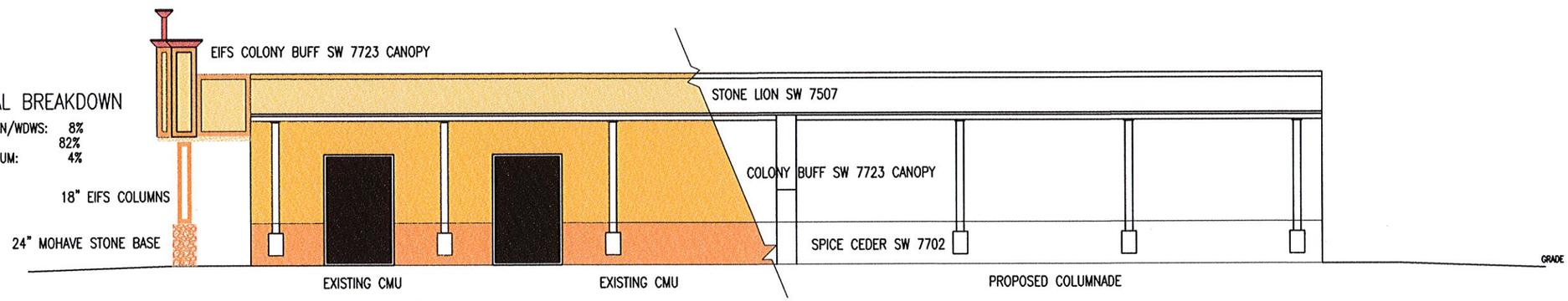

2 EAST ELEVATION

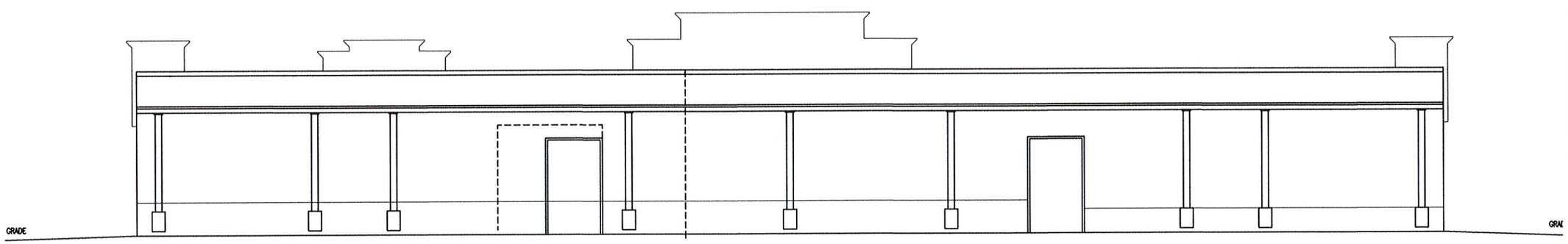

3 NORTH ELEVATION
SCALE: 1/4" = 1'-0"

Paul D. Jaunich–Architect
Assistance in Design & Development
325 5th Street South, Delano, Mn. 55328
(763) 972–3822

Professional Signature

I hereby certify that this plan,specification, or report was prepared by me or under my direct supervision and that I am a duly Licensed Architect under the laws of the State of Minnesota.

Name: Paul D. Jaunich
Signature:
Date: Registration No. 21238

Drafting & Design

Paul D. Jaunich
325 5th Street South
Delano, MN. 55328
763 972–3822 Cell: 612 247–0479

Submittals/Revisions

No.	Revision/Issue	Date
1	Start Project	5/15/14
2	Revisions	6/15/14
3	Revisions	

CADD Qualifications

CADD files prepared by the Consultant for this project are instruments of the consultants professional services for use solely with respect to this project. These CADD files should not be used on other projects, for additions to this project or for completion of this project by others without written approval by the consultant. With the Consultant's approval, others may be permitted to obtain copies of the CADD drawing files for information and reference only. All intended or unintentional revisions, additions, or deletions to these CADD files shall be made at the full risk of that party making such revisions, additions or deletions and that party shall hold harmless and indemnify the consultant from any and all responsibilities, claims and liabilities.

Sheet Index

A–2.1 Main Level Floor Plan
A–3.1 Exterior Elevations/Details
A–4.1 Reflected Ceiling Plan

Project Name

Sean Schumacher
5020 Highway 12
Maple Plain, MN 55359

Sheet Title

Exterior Elev. Details

Project Number

051514

Sheet Number

A–3.1

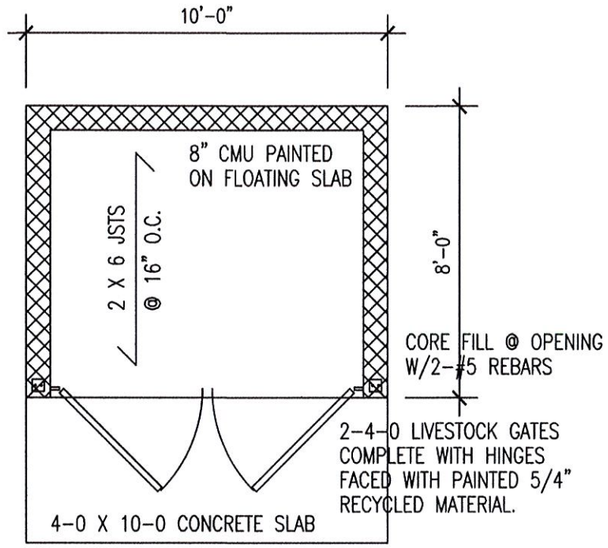

1 TRASH ENCLOSURE PLAN
1/4" = 1'-0"

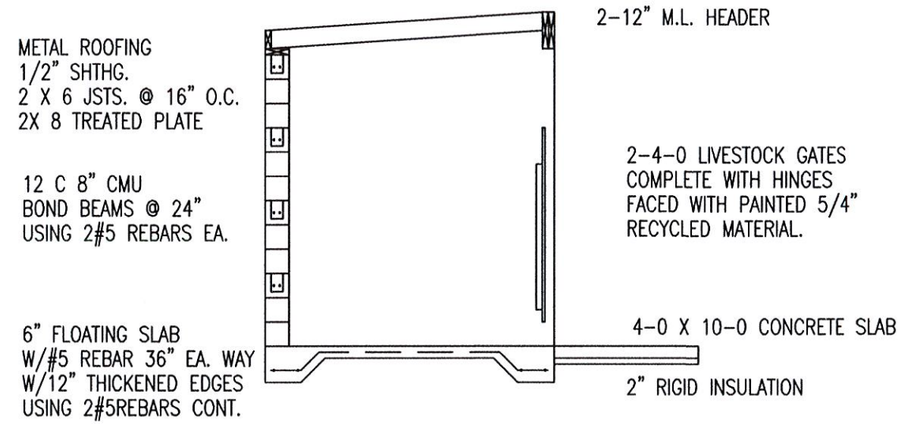

2 FULL CROSS SECTION
1/4" = 1'-0"

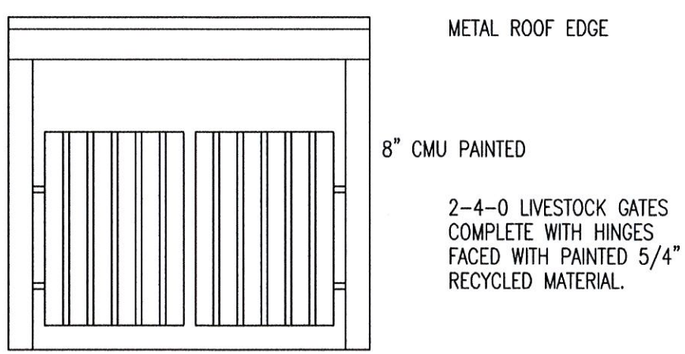

3 TRASH ENCLOSURE FRONT ELEVATION
1/4" = 1'-0"

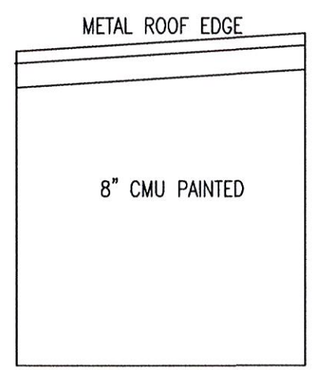

4 TRASH ENCLOSURE SIDE ELEVATION
1/4" = 1'-0"

I hereby certify that this plan,specification, or report was prepared by me or under my direct supervision and that I am a duly Licensed Architect under the laws of the State of Minnesota.
Name: Paul D. Jaunich
Signature:
Date: Registration No. 21238

Paul D. Jaunich-Architect
Assistance in Design & Development
328 South 3rd St., Delano, Mn. 55328
(763) 972-3822

Schumacher Properties
5020 U. S. Highway 12
Maple Plain, MN 55359
cell 952 484-4479

Sheet
A-4.1

140625

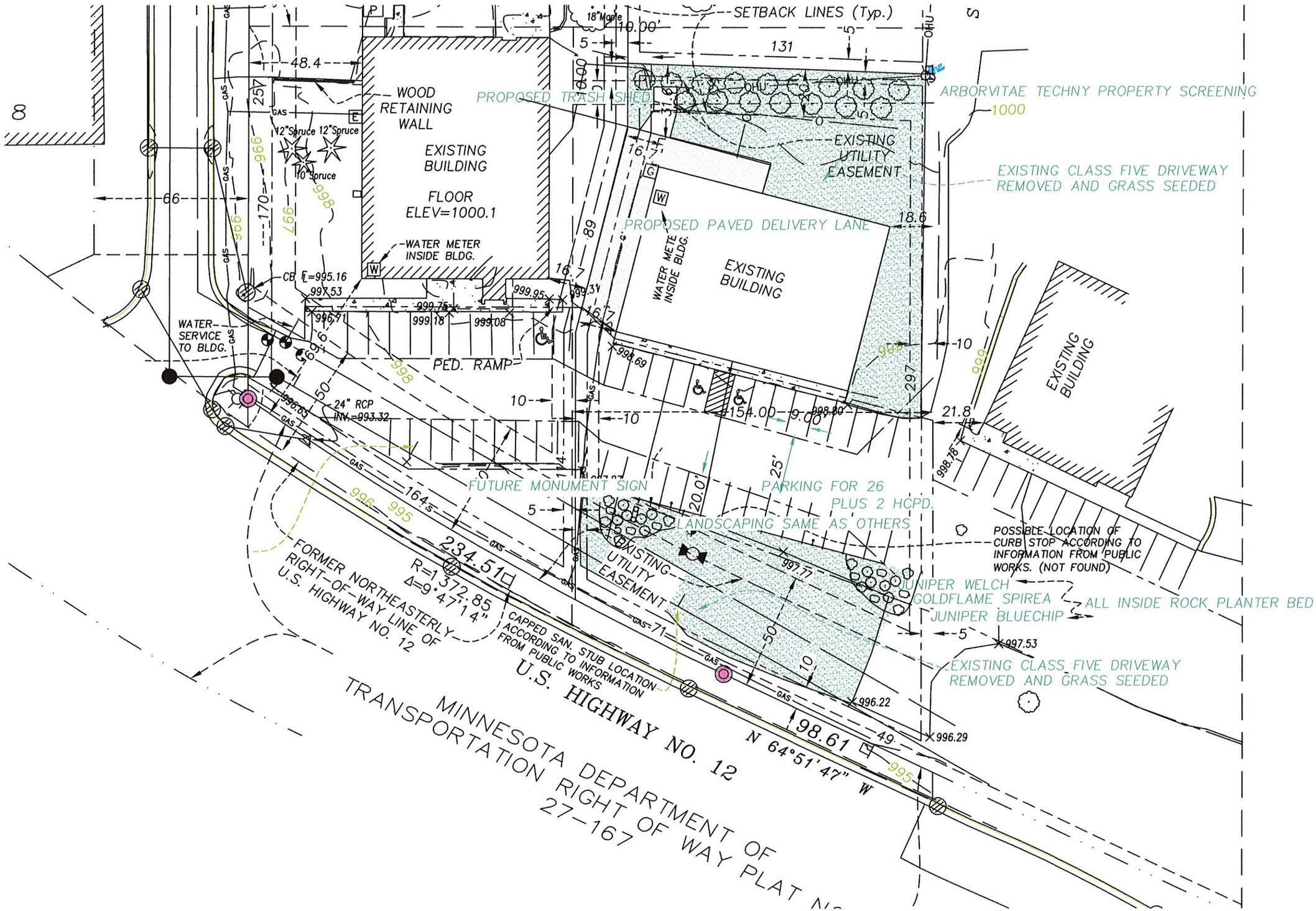

I hereby certify that this plan,specification, or report was prepared by me or under my direct supervision and that I am a duly Licensed Architect under the laws of the State of Minnesota.

Name: Paul D. Jaunich

Signature:

Date: Registration No. 21238

Paul D. Jaunich-Architect
ssistance
esign &
evelopment
325 South 5th St., Delano, Mn. 55328
(763) 972-3822

Liquor Depot
5020 Highway 12
Maple Plain, MN. 55359
Sean 952 484-4479

Sheet
A-1.1
051514

Maggie McCallum

From: Jeff Carson <jac@carsoncs.net>
Sent: Thursday, September 18, 2014 3:32 PM
To: Maggie McCallum
Subject: Re: Liquor Depot. Maple Plain MN, Land Use Application

Maggie
I have reviewed the application of Schumacher Properties for a Liquor Depot and I have no comments at this time

Sent from my iPad

On Sep 16, 2014, at 12:20 PM, Maggie McCallum <mmccallum@mapleplain.com> wrote:

> Hi Jeff and Gary,
>
> Attached is the Land-Use Application for the new liquor store. Please review and make any comments if applicable.
>
> Thanks!
>
> Sincerely,
>
> Maggie McCallum
>
> <Narrative.pdf>
>
> <Plans.pdf>
>
> <Design_Color.pdf>
>
> <Proposed Easement.pdf>

Stantec

Memo

To:	Mark Kaltsas City Planner	From:	Dan D. Boyum City Engineer
File:	193801803	Date:	September 23, 2014

Reference: Liquor Depot – Proposed Building Design and Narrative

We have reviewed the information received on September 16, 2014. The narrative dated August 27, 2014 from Paul D. Jaunich, the developer's architect, discusses the following:

- They will address all four sides of the existing building with various reliefs and aluminum panels
- striping the existing parking lot and designating two handicap parking stalls
- removing existing class 5 aggregate and placing topsoil and seeding to the south of the existing parking area
- a monument sign with landscaping will be part of a future signage package
- a 12' x 6' trash enclosure will be placed in the NE corner of the site
- class 5 around the building will be improved and will maintain positive drainage

Our comments related mostly to the site narrative would be as follows:

1. From the exterior elevation details, will there be any screening done on rooftop equipment, especially as it relates to the future residential homes that will be built to the north of this site.
2. The striping of parking stalls should match the City's standard of 9' x 20'. Handicap stalls should match ADA requirements.
3. Any work in the MNDOT ROW related to removal of existing class 5 and placement of topsoil/seeding may require a MNDOT grading and excavation permit. Topsoil should be placed at 6" based on past comments from MNDOT.
4. We can provide comments on the monument when this location and package is submitted.
5. Trash enclosures should be made of complimentary materials and colors.
6. It does not sound like the developer will be changing any drainage patterns.
7. Screening of the north side of this property from the future homes that will be built to the north should be discussed. The development to the north is showing some screening, but the combination of both properties placing some screening when a backyard of a single family home will be to the north of the facility should be considered.

Reference: Liquor Depot – Proposed Building Design and Narrative

Please contact me with any questions.

STANTEC CONSULTING SERVICES INC.

Dan Boyum
Associate
Phone: (651) 604-4829
Fax: (651) 636-1311
Dan.Boyum@stantec.com

Attachment: None

c. Maggie McCallum, Tessia Melvin

Maggie McCallum

From: Gary Kroells <GKroells@westhennepin.com>
Sent: Wednesday, September 24, 2014 2:31 PM
To: Maggie McCallum; Jeff Carson(jac@carsoncs.net)
Subject: RE: Liquor Depot. Maple Plain MN, Land Use Application

Thanks for allowing me to review it. Would it be possible to see any of the lighting plans to go over crime prevention through environmental design issues. In a more basic form, Where are the exterior lights in regards to the entrances? Lights or at least motion lights should be at each point of entry. This would cut down on break ins. Lights do prevent break ins.

Chief Gary Kroells
West Hennepin Public Safety
1918 County Road 90
Maple Plain, MN 55359
Phone: 763-479-0500
Cell: 612 328-1905
Fax: 763-479-0504
westhennepin.com
gkroells@westhennepin.com

Disclaimer: Information in this message or an attachment may be government data and thereby subject to the Minnesota Government Data Practices Act, Minnesota Statutes, Chapter 13, may be subject to attorney-client or work product privilege, may be confidential, privileged, proprietary, or otherwise protected, and the unauthorized review, copying, retransmission, or other use or disclosure of the information is strictly prohibited. If you are not the intended recipient of this message, please immediately notify the sender of the transmission error and then promptly delete this message from your computer system. Thank you in advance for your cooperation.

From: Maggie McCallum [mailto:mmccallum@mapleplain.com]
Sent: Tuesday, September 16, 2014 12:20 PM
To: Jeff Carson (jac@carsoncs.net); Gary Kroells
Subject: Liquor Depot. Maple Plain MN, Land Use Application

Hi Jeff and Gary,

Attached is the Land-Use Application for the new liquor store. Please review and make any comments if applicable.

Thanks!

Sincerely,

Maggie McCallum

City of Maple Plain

Proposed Text Amendments to the City of Maple Plain Ordinances Title IX, Chapter 92 Animals and Title XV, Land Usage, Chapter 153.063 General Fencing, Screening, Landscaping, and Storage,

To:	Planning Commission
From:	Mark Kaltsas, City Planner
Meeting Date:	October 21, 2014

Consideration:

Proposed text amendments to the City of Maple Plain Ordinances as follows:

a. Title IX, Chapter 92 Animals, consideration to amend the ordinance to further define the total number and type of permitted animals.

b. Title XV, Land Usage, Chapter 153.063 General Fencing, Screening, Landscaping, and Storage, consideration to amend the ordinance to provide more details pertaining to fencing requirements and fence permits.

Discussion (Animals):

The City has received complaints pertaining to the keeping and harboring of several different types of animals. The City's ordinance currently addresses animals in two areas of the ordinance as follows:

1. Chapter 92 Animals – this chapter addresses dogs, cats and other similar animals. This chapter limits the total number of animals through its definition of kennels (Chapter 92.01 – Kennel).

2. Chapter 153 Zoning Districts – The City provides for permitted uses in all zoning districts. In Chapter 153.025, B, 5, the City prohibits livestock as permitted uses in residential areas.

There are several areas of the City's ordinance that would benefit from additional clarification. In the case of Chapter 153, the City does not provide a detailed definition of livestock. Providing a clear definition of livestock to include certain animals that are typically associated with farms/agriculture would help the City to clarify the intent of its ordinance. It has also been found that the kennel definition limits the total number of animals that can be kept on a given property to no more than two (2). Limiting the total number of animals on a property to no more than two (2) may be too restrictive. It is more common for Cities to limit the total number of animals permitted on a property to three (3).

In order to more consistently administer the City's ordinances, the City should consider clarifying the animal and land use ordinances by adding detail to several definitions, revising the definition of kennel, adding a definition of livestock and adding a new section which would govern the harboring and keeping of chickens. Staff has prepared preliminary "draft" language/concepts for consideration and discussion only by the Planning Commission. It is anticipated that the Planning Commission will provide feedback and comments relating to this ordinance. Utilizing the comments and direction provided by the Planning Commission Meeting, staff will prepare a draft ordinance for a second reading at a future meeting

PRELIMINARY DRAFT ANIMAL ORDINANCE

CHAPTER 92: ANIMALS

Section 92.01 Definitions

92.02 Licenses and fees

92.03 Display of license

92.04 Prohibitions

92.05 Designation of dangerous or potentially dangerous dogs; registration requirement

92.06 Violations

92.07 Cats and other animals

92.08 Harboring and Keeping of Chickens

92.01 DEFINITIONS.

For the purpose of this chapter, the following definitions shall apply unless the context clearly indicates or requires a different meaning.

ANIMALS. Animals include livestock, farm animals and all other animals, reptiles, and feathered birds or fowl, except dogs, cats, ferrets, gerbils, hamsters, rabbits, and caged household birds.

ANIMAL CONTROL OFFICER. The city=s police/public safety agency or such other person or agency under contract with the city to provide animal control services.

AT LARGE. A dog is AT LARGE when he or she is off the property of his or her owner and not under restraint.

CHICKEN. Chicken means a fowl of the genus *Gallus* and species *Gallus domesticus* that is commonly referred to as domesticated fowl.

CHICKEN COOP. *Chicken coop* means any structure used for the housing of chickens.
CHICKEN RUN. *Chicken run* means a fenced outdoor area for the keeping and exercising of chickens.

DANGEROUS DOG. Any dog that has:

(1) Without provocation, inflicted substantial harm on a human being on public or private property;

(2) Killed a domestic animal without provocation while off the owners property; or

(3) Been found to be potentially dangerous, and after the owner has notice that the dog is potentially dangerous, the dog aggressively bites, attacks, or endangers the safety of humans or domestic animals.

Farm Animals means cattle, horses, mules, sheep, goats, swine, ponies, ducks, geese, turkeys, chickens, guinea hens and honey bees.

KENNEL. It is unlawful for any person to keep or harbor a total of four or more dogs, cats, ferrets, or rabbits, or a combination thereof, over six months of age. ~~*A place where more than 2 dogs over 3 months of age are kept, or a place at which the business of selling, boarding, breeding, showing, or treating dogs is conducted.*~~

OWNER. Any person, group, or corporation owning, harboring, or having custody of a dog.

ROOSTER. Rooster means a male chicken.

92.04 PROHIBITIONS.

(A) It is unlawful for any person to keep or harbor any animal, not in transit, except (1) animals used in a parade for which a permit has been issued, or (2) animals kept in an animal hospital or clinic for treatment by a licensed veterinarian, or (3) animals kept in a pet shop licensed under the City Code, or (4) as otherwise provided in this section.

~~(A)~~ (B) It shall be unlawful for the dog or cat, of any person who owns, harbors, or keeps a dog or cat, to run at large. A person who owns, harbors, or keeps a dog or cat which runs at large shall be guilty of a misdemeanor. Dogs or cats on a leash and accompanied by a responsible person or accompanied by and under the control and direction of a responsible person, so as to be effectively restrained by command as by leash, shall be permitted in streets or on public land unless the city has posted an area with signs reading Dogs or Cats Prohibited.

~~(B)~~ (C) (1) Habitual barking. It shall be unlawful for any person to keep or harbor a dog which habitually barks or cries. Habitual barking shall be defined as barking for repeated intervals of at least 5 minutes with less than 1 minute of interruption. The barking must also be audible off of the owners or caretakers premises.

(2) Warrant required. The animal control officer or police officer shall not enter the property of the owner of an animal described in this division (B) unless the officer has first obtained the permission of the owner to do so or has obtained a warrant issued by a court of competent jurisdiction, as provided for in ' 10.20, to search for and seize the animal.

~~(C)~~ (D) Any person in control of a dog off the property of its owner shall be responsible to pick up and dispose of the dogs feces.

92.08 Harboring and keeping of chickens.

A. *Chicken permit required*. It is unlawful for any person to keep, harbor, maintain, possess, or otherwise control any chicken within the city, except:

1. Pursuant to a permit issued by the city under this subdivision on a parcel of record zoned for single family detached dwelling.

B. *Permit application and permit fees*. An application for a permit hereunder shall be filed with the city administrator upon an application form furnished by the city. The permit fee, which shall be paid and filed with the permit application, shall be in an amount established by city council resolution. A permit issued hereunder shall be for duration of one year from its date of issuance. An application for permit renewal shall be filed 60 days prior to the expiration of the current permit. The permit application shall include, but not be limited to, the following:

1. The full name and address of the following persons:
   (a) The applicant signed thereto; and

(b) The owner(s) of the premises on which chickens are sought to be kept and for which the permit would apply;

2. The street address of the premises on which chickens are sought to be kept;

3. The number of chickens to be kept on the premises;

4. A detailed sketch plan of the premises on which chickens are sought to be kept, including the location, the dimensions and design of the coop and run, establishing compliance with the chicken coop and run specifications provided in this subdivision;

5. A statement certifying whether the property's homeowners' association rules, if any, prohibit the keeping of chickens on the property for which the application is sought;

6. If the applicant is not the fee owner of the premises on which the chickens are sought to be kept and for which the permit would apply, the application shall be signed by all fee owners of the premises.

7. Any other and further information as the city deems necessary.

C. *Granting or denying issuance of permit*. The city administrator may grant an initial or renewal permit under this subdivision; however, a permit may not be issued or renewed unless the application filed demonstrates compliance with the requirements of this subdivision. A permit shall not be issued or renewed until the animal control officer inspects and approves the premises, including the chicken coop and run, at which chickens are sought to be kept. The city administrator shall deny a permit hereunder for any of the following reasons:

1. The application is incomplete or contains false, fraudulent or deceptive statements.

2. The applicant does not or has not complied with one or more of the provisions of this subdivision.

3. The premises for which the permit is sought, including, but not limited to, the proposed or existing chicken coop or run, is not in compliance

with any provisions of this subdivision, other city code provisions or state laws relating to zoning, health, fire, building or safety.

4. The proposed chicken coop would result in a violation of or be inconsistent with the accessory structure zoning regulations elsewhere in this Code.

5. The applicant or owner of the premises where the chickens are to be kept has been convicted of a violation under this subdivision.

6. The applicant is not the owner of the chickens proposed to be kept on the premises.

7. The applicant is not the occupant of the premises for which the permit is sought to be issued.

D. *Conditions of permit*. A permit granted under this subdivision shall be subject to the following conditions:

1. *Ownership*. The owner of the chickens must occupy the premises for which the permit is issued.

2. *Inspection*. The premises, including the coop and run thereon, for which a permit is issued shall at all reasonable times be open to inspection by the animal control officer or any other city official to determine compliance with this subdivision, other city code provisions and state laws relating to zoning, health, fire, building or safety.

3. *Transferability of permit*. A permit issued hereunder shall be nontransferable. It is unlawful to keep, harbor, maintain, possess, or otherwise control any chicken on property that is not identified on the permit.

4. *Specifications for feeding chickens*. All feed for the chickens shall be stored in water-tight and vermin-proof containers.

5. *Specifications of chicken coop and run*. A chicken coop and run are required. The construction and location of the chicken coop and run shall be in compliance with the applicable building and zoning regulations of the city and the following requirements:

(a) The interior floor space of the chicken coop shall be a minimum size of two square feet for each chicken authorized under the permit.

(b) The exterior finish materials of the chicken coop shall be: (i) weather-resistant, protective covering material, decay-resistant wood, or if exterior finish wood is not decay resistant, then the wood finish shall be protected from the elements and decay by paint or protective covering (e.g., siding, fascia wrap); and (ii) in accordance with the accessory structure regulations set forth in the zoning regulations in this Code.

(c) The construction of and materials used for the chicken coop and run must be adequate to prevent access by rodents.

(d) The chicken run shall be attached to the chicken coop. The chicken coop and run shall be deemed as a single structure and subject to the accessory structure regulations set forth in the zoning regulations of this Code.

(e) The floor area of the chicken run shall be a minimum size of five square feet for each chicken authorized under the permit.

(f) The chicken run shall be fully enclosed by fencing or other similar material.

(g) No chicken coop or run, or any portion thereof, shall be within 25 feet of the outer perimeter of any inhabitable building.

(h) The chicken coop and run shall be setback at least ten feet from the rear lot line and at least five feet from the side lot lines. The chicken coop and run, or any portion thereof, shall not be located in the front yard.

(i) The chicken coop and run shall be kept in good repair as to be in compliance with the property maintenance regulations elsewhere in this Code.

(j) The chicken coop and run shall be kept in a sanitary and odor-free condition, including the regular and frequent removal and proper disposal of any accumulated chicken feces or waste, dirt or filth that could create a safety or health hazard.

(k) The chicken coop and run shall be immediately removed if a permit granted under this subdivision expires or is revoked.

6. *Regulations*. The keeping, harboring, maintaining, or possessing of any chicken under a permit issued pursuant to this subdivision shall be in accordance with the following:

(a) No more than five chickens shall be kept or harbored on the premises to which the permit applies.

(b) Roosters are prohibited.

(c) Slaughtering of chickens on any property zoned for residential use is prohibited.

(d) No chickens shall be kept, maintained, housed or permitted inside any residential dwelling or any garage.

(e) No chicken shall be permitted to run at large. The term "run at large" is defined as any chicken freely roaming in any area not on the premises to which the permit applies. The chicken shall be deemed to be permitted to run at large when the premises to which the permit applies is not securely enclosed by a proper boundary fence as to prevent a chicken from leaving the premises.

(f) If the chickens are not contained at all times to the coop and run and allowed to freely roam within the yard, the property shall be enclosed by a fence in accordance with the fence regulations set forth in the zoning regulations of this Code and which by material and design prevents a chicken from leaving the premises.

(g) Chickens shall not be kept in such a manner as to constitute a public nuisance. Any violation of the provisions of this subdivision shall be deemed a public nuisance.

(h) No chicken eggs shall be sold or offered for sale; all chicken e eggs shall be for personal use or consumption.

7. *Revocation of permit*. A violation of any provision of this subdivision or any provisions of the permit issued hereunder shall constitute grounds for revocation of a permit.

Discussion (Fencing):

The City receives many inquiries from residents and contractors pertaining to fences throughout the construction season. The City does its best to explain where fences can be located, but do not currently have any way to ensure its comprehension. In order to make certain that fences are installed in accordance with the City's requirements, a zoning level plan review could be required. The City would require that residents or their contractors would submit a site plan to the City for review. The plan would identify the proposed fence location, property lines, structures and setbacks. The City would be able to review the plan and ensure compliance with all applicable requirements. This process would help to reduce the possibility that a fence would be located in a prohibited location.

In addition, the City has had complaints from neighboring property owners relating to fences being located on the property lines. One way to address this concern would be to require neighboring property owners to "sign-off" on a fence proposed to be located on the property line. Staff researched the idea of requiring a fence to be setback a minimum distance from the property line. Establishing a minimum setback distance could possibly create unmaintained "strips" of land between fences. The practice of requiring a minimum setback is not common among most Cities. The City will need to determine if they want to establish a maintainable area on the neighboring property side of a fence.

Staff has prepared draft language for Planning Commission discussion and consideration. The proposed language establishes the requirement of a zoning permit, neighbor signature for fences on the property line and additional language relating to easements.

PRELIMINARY DRAFT FENCE ORDINANCE

§ 153.063 GENERAL FENCING, SCREENING, LANDSCAPING, AND STORAGE.

(B) Fencing.

(1) A zoning permit is required for fences 6 feet in height and less. A building permit is needed for fences greater than 6 feet in height.

~~(1)~~ (2) Fences must be located entirely upon the private property of the person constructing the fence ~~where they are constructed~~ and must be set back from all property

boundaries ~~at~~ a distance necessary to allow for maintenance as defined by § 93.19(B)(19). A fence may be allowed on the property line with written permission of all the adjacent property owners. Property corner irons must be located, exposed, and verified at the time of final inspection, unless deemed unnecessary by the City Administrator.

~~(2)~~ (3) Fences must be constructed so that the side containing the framing supports and cross pieces face the interior of the owner's lot.

~~(3)~~ (4) No fence shall exceed 6 feet in height and in the case of grade separation, the height shall be determined on the basis of measurement from the average point between the highest and lowest grade.

~~(4)~~ (5) Fencing located in a front yard or in front of the principal dwelling in residential districts may not exceed 4 feet in height, or 3 feet as defined under § 153.063(A) above, and must be no greater than 50% opacity. A corner property, or property abutting 2 city streets, shall be determined to have 2 front yards.

~~(5)~~ (6) Barbed wire fences are not allowed and chain link fences must be constructed so that no barbed ends are exposed.

~~(6)~~ (7) All in-ground swimming pools must be surrounded by a fence and the pool cannot be filled until a fence that meets requirements is completed and approved.

~~(7)~~ (8) No fence may be located within any public rights-of-way.

(9) Fences may be constructed within public and private utility and drainage easements provided that the fence cannot be located within a drainage or utility easement if there is a utility, either public or private, located within the easement. Removal of a fence or a portion of for the purpose of utilizing the easement shall be at the property owner's expense.

Recommendation:

Staff is seeking direction, comments and feedback from the Planning Commission relating to the proposed text amendments. Planning Commissioners can make a recommendation to amend the ordinance(s) to the City Council or make/request suggested changes to the proposed language and ask that the ordinance(s) be brought back for additional review, discussion and consideration.